MERCEDES-BENZ

TYPE 190

ILLUSTRATED SPARE PARTS CATALOGUE

121.010 and 121.011

FACSIMILE COVER

DOCUMENT NUMBER UNCONFIRMED

DAIMLER-BENZ AKTIENGESELLSCHAFT • STUTTGART-UNTERTUERKHEIM • GERMANY

PRELIMINARY NOTE

The first pages of the original Type 190 Illustrated Spare Parts Catalogue were missing from the available copy.

The replacement cover is a facsimile based on the probable appearance of the original publication. It is not an authenticated reproduction.

The original document number has not been confirmed.

PRELIMINARY REMARKS

This list comprises the spare parts for the type 190 with four-cylinder gasoline engine M 121 B.I in the design specified in the following:

Model	Design of chassis	Sales designation
121.010	Passenger car sedan with gasoline engine M 121 B.I	190
121.011	Passenger car sedan with sliding roof with gasoline engine M 121 B.I	190

The designations "right" and "left" refer to driving direction. The designations "first", "second" etc. (e.g. crankshaft bearing) are seen from radiator side.

Indented parts in the column "Nomenclature" are contained in the preceding - not indented - part.

Figures in column "Fig. No." set in parenthesis () indicate that the illustrated part does not correspond any more to the latest design.

The designation "a.r." in column "Quantity" means "as requested".

The designation "optional" means that the respective parts will be supplied as available.

Table I **Position of Type Plate, Engine, Chassis and Body Number Plate**

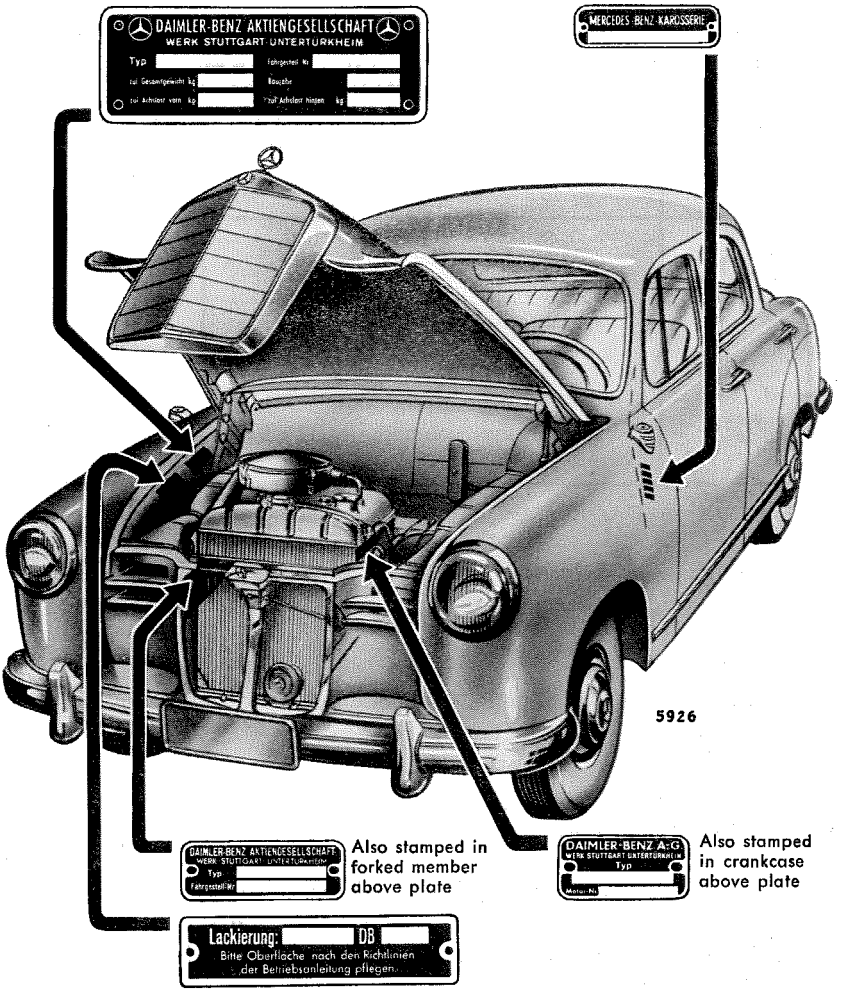

When ordering spare parts do not fail to quote:

Engine type (model) e.g. M 121 B.I/121.920	with engine number 65 00010	) see table I
Chassis type (model) e.g. 190/121.010	with chassis number 65 00010	) see table I
Body number e.g. A 121.010 65 00010	Body number plate left front wall pillar, between hinges.	)
Part number:	see column "part number"	
Exact designation:	see column "Nomenclature" A dash (-) in column part number indicates that the entire designation in column "Nomenclature" must be quoted.	

When ordering spare parts for units, also state the number of these units:

Transmission number:	stamped in transmission housing	) see table II
Front axle number:	at steering knuckle, left and right	) see table II
Rear axle number:	stamped in rear axle case, bottom	) see table II
Steering number:	stamped in steering case cover	) see table II

When ordering keys, please indicate the respective key number, which can be found:

for the lockable handle and lockable luggage compartment lid) at the cylindrical body of the lock

(Locking of door handle and luggage compartment lock is of the same type).

Carefully note the engine, chassis, and body numbers of your car.

Our customers are requested to place spare parts orders with our branches and agencies only.

10/024

DAIMLER-BENZ AKTIENGESELLSCHAFT

Stuttgart-Untertürkheim

Table II

Position of Unit Nos.

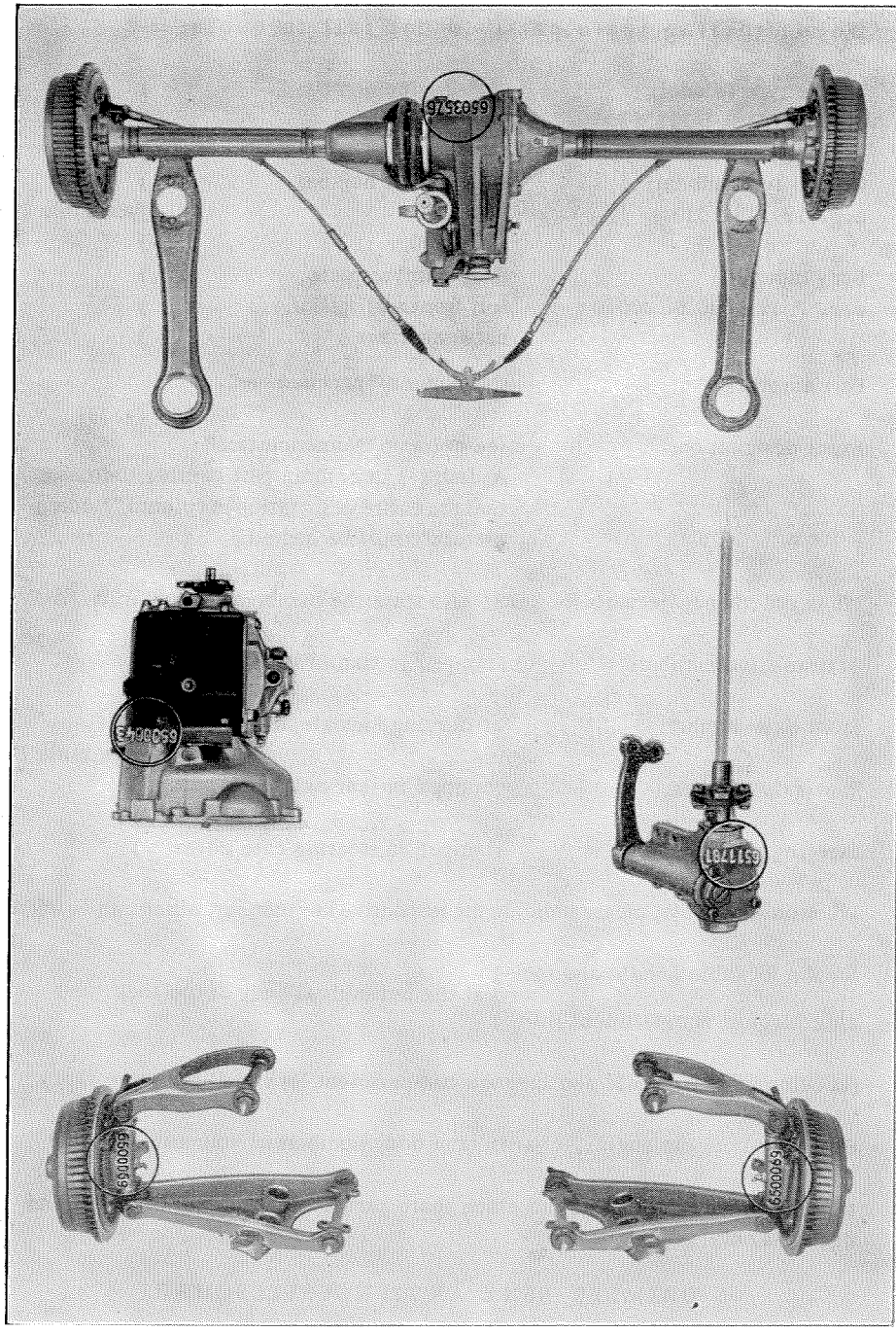

Table III

Engine (Spark Plug Side)

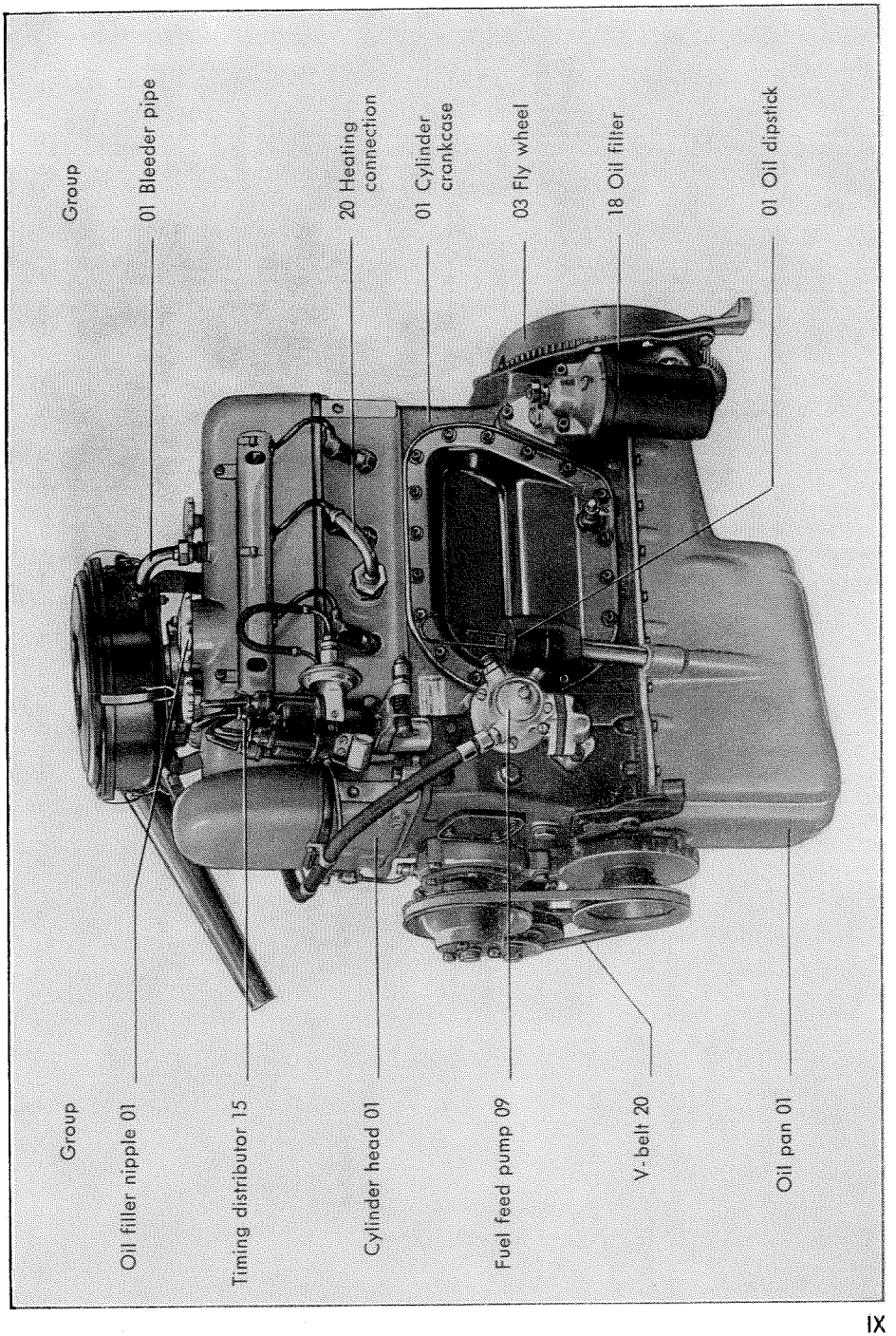

Table IV

Engine (Carburettor Side)

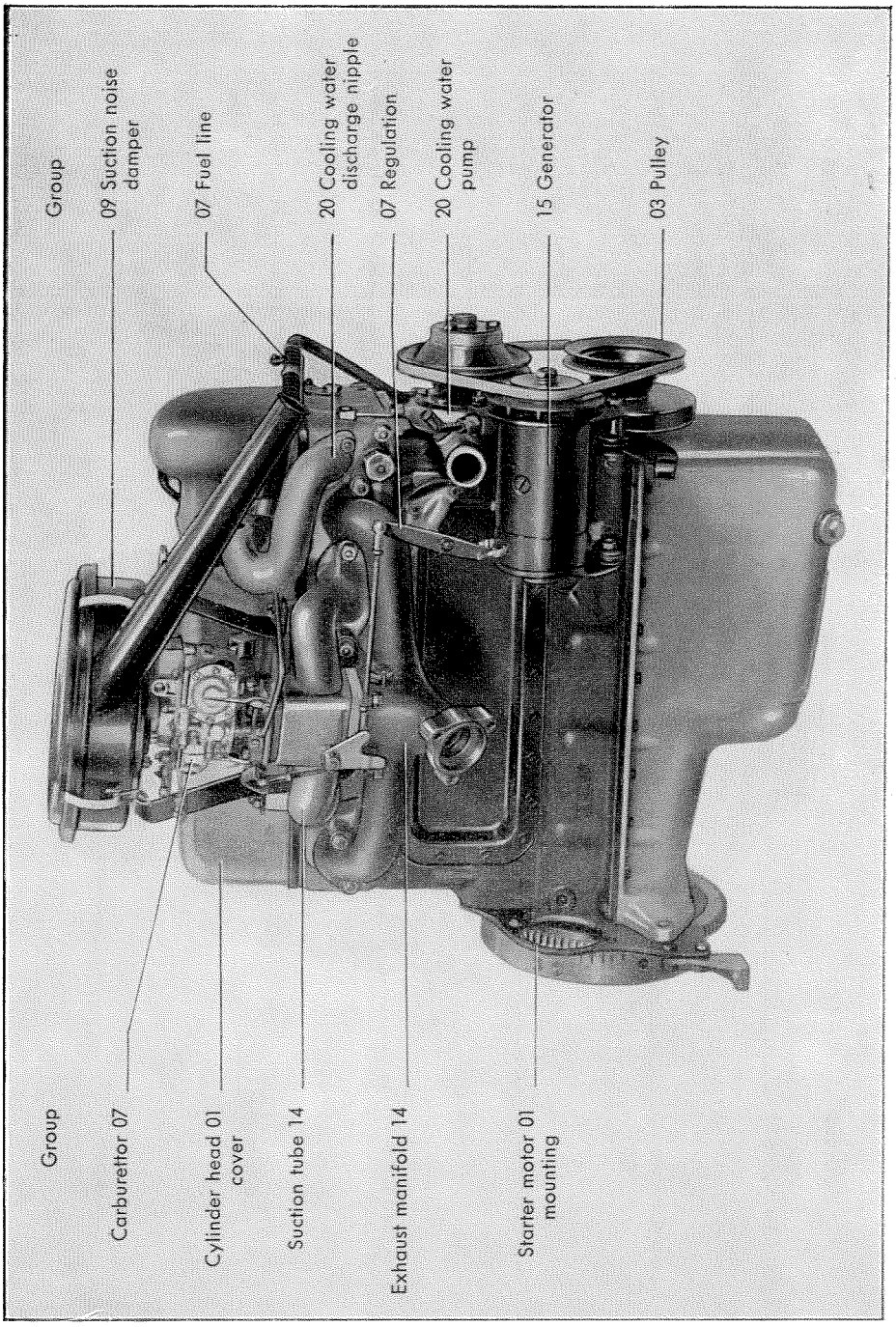

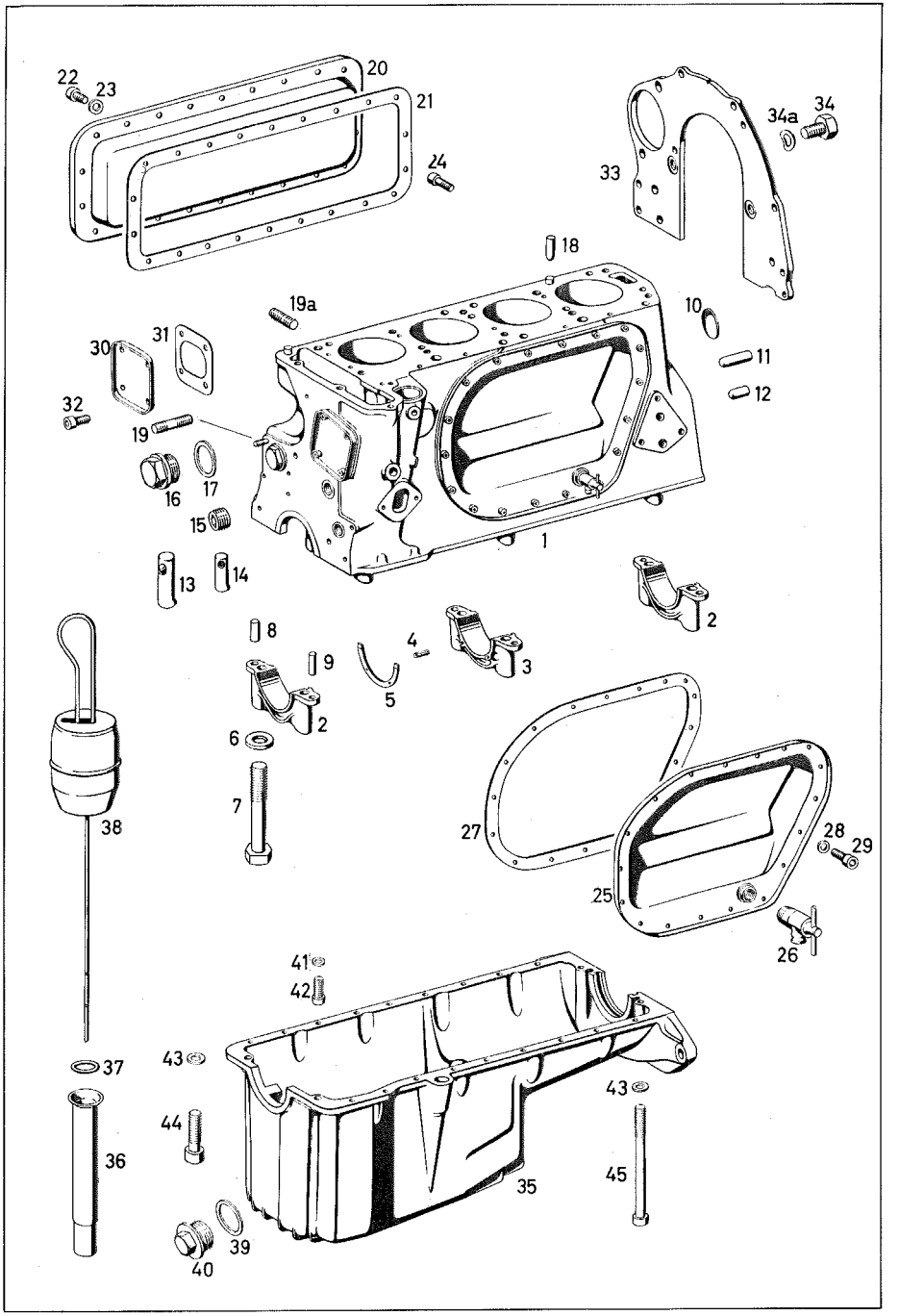
22
23
20
21
24
33
34a
34
18
19a
10
11
12
30
31
32
19
16
17
15
1
13
14
2
8
9
4
5
3
2
6
7
38
27
28
29
25
26
41
42
43
44
37
36
35
45
39
40

Fig. No.	No. of spare part	Denomination	Quantity	Remarks
		ENGINE		
-	121 010 00 00	Engine, complete without starter motor, fan, clutch and transmission	1	
		CYLINDER CRANKCASE		
1	121 010 11 08	Cylinder crankcase	1	
2	121 011 01 11	Crankshaft bearing cap	2	optional for 1st and 3rd crankshaft bearing cap
-	121 011 04 11	Crankshaft bearing cap	2	
3	121 010 01 23	Crankshaft bearing cap with dowel pin	1	optional for 2nd crankshaft bearing
-	121 010 06 23	Crankshaft bearing cap with dowel pin	1	
4	121 991 00 41	Dowel pin	4	
5	120 011 00 52	Guard plate half	2	
-	120 011 01 52	Guard plate half 2.05 mm	2	for crankshaft bearing cap
-	120 011 02 52	Guard plate half 2.10 mm repair design	2	
-	120 011 03 52	Guard plate half 2.20 mm	2	
6	121 990 12 40	Washer	5	for crankshaft bearing cap
7	-	Hex.-hd. screw M 12x75 DIN 931-10 K	6	at cylinder crankcase

Fig. No.	No. of spare part	Denomination	Quantity	Remarks
8	-	Cylindrical pin 10 m6x16 DIN 7 rounded	3	))for crankshaft)bearing cap
9	-	Cylindrical pin 8 m6x16 DIN 7 rounded	3	))at cylinder)crankcase)
10	-	Locking plate B 25 N 59 a (for locking timing mark holes, cylinder crankcase, rear)	1	
11	186 991 07 01	Cylindrical pin	1	)for intermed.)plate at cyl.
12	186 991 08 01	Cylindrical pin	1	)crankcase
13	180 016 00 60	Water distributor	2	
14	180 016 01 60	Water distributor	4	
15	-	Screw plug M 16x1, 5 DIN 906-4 S	3	))
16	121 997 00 30	Screw plug	1	)for locking)oil duct,)front and rear
17	-	Sealing ring A 24x30 DIN 7603 A1	1	))
18	-	Cylindrical pin 10 m6x14 DIN 7 rounded (for cylinder head at cylinder crankcase)	2	
19	-	Stud bolt M 8x30 DIN 939-5 S (for tightening screw at cylinder crankcase)	1	

Fig. No.	No. of spare part	Denomination	Quantity	Remarks
19a	-	Stud bolt M 8x18 DIN 939-8 G (for support, generator)	2	
		CYLINDER COVER		
20	121 015 00 05	Cylinder cover (at starter side)	1	
21	121 015 01 21	Gasket	1	)
22	-	Hex.-hd. socket screw M 6x12 DIN 912-8 G	19	)for cylinder)cover at)cylinder crank-
23	180 990 10 40	Washer	22	)case, starter)side
24	-	Hex.-hd. socket screw M 6x18 DIN 912-8 G	3	)
25	121 010 03 10	Cylinder cover with nipple (at spark plug side)	1	
26	-	Discharge valve CM 14x1,5 K DIN 71401 (in cylinder cover)	1	
27	121 015 02 21	Gasket	1	)
28	180 990 10 40	Washer	18	)for cylinder)cover at)cylinder crank-
29	-	Hex.-hd. socket screw M 6x12 DIN 912-8 G	18	)case, spark)plug side
30	180 011 01 33	Cover (in cylinder crankcase, front)	1	

Fig. No.	No. of spare part	Denomination	Quantity	Remarks
31	180 011 01 79	Gasket	1	for locking cover at cylinder crankcase
32	-	Hex. -hd. socket screw M 6x12 DIN 912-8 G	4	
-	180 052 10 06	Bushing (for intermediate gear shaft, rear)	1	see group 05
-	180 150 01 07	Bearing with bushing	1	see group 15
33	180 011 06 05	Intermediate plate (for cylinder crankcase, starter motor)	1	
34	-	Hex. -hd. screw M 10x15 DIN 933-8 G	2	for intermed. plate at cylinder crankcase
34a	-	Lock washer B 10 DIN 137	2	
		OIL PAN		
35	121 010 10 13	Oil pan with threaded bushing	1	
36	180 010 00 66	Guide tube (in oil pan for oil dipstick)	1	
37	180 997 00 40	Sealing ring (for bleeding filter)	1	
38	121 010 00 72	Oil dipstick with bleeding filter	1	
39	-	Sealing ring C 26x32 DIN 7603 Cu-Asb.	1	for oil discharge, oil pan
40	136 997 12 30	Screw plug	1	
41	-	Washer 6, 4 DIN 433 (for oil pan at cylinder crankcase)	18	

Fig. No.	No. of spare part	Denomination	Quantity	Remarks
42	-	Hex. -hd. socket screw M 6x15 DIN 912-8 G	18	)))
43	-	Washer 8, 4 DIN 433	4	)) for oil pan
44	-	Hex. -hd. socket screw M 8x30 DIN 912-8 G	2	) at cylinder) crankcase)
45	-	Hex. -hd. socket screw M 8x90 DIN 912-8 G	2	))

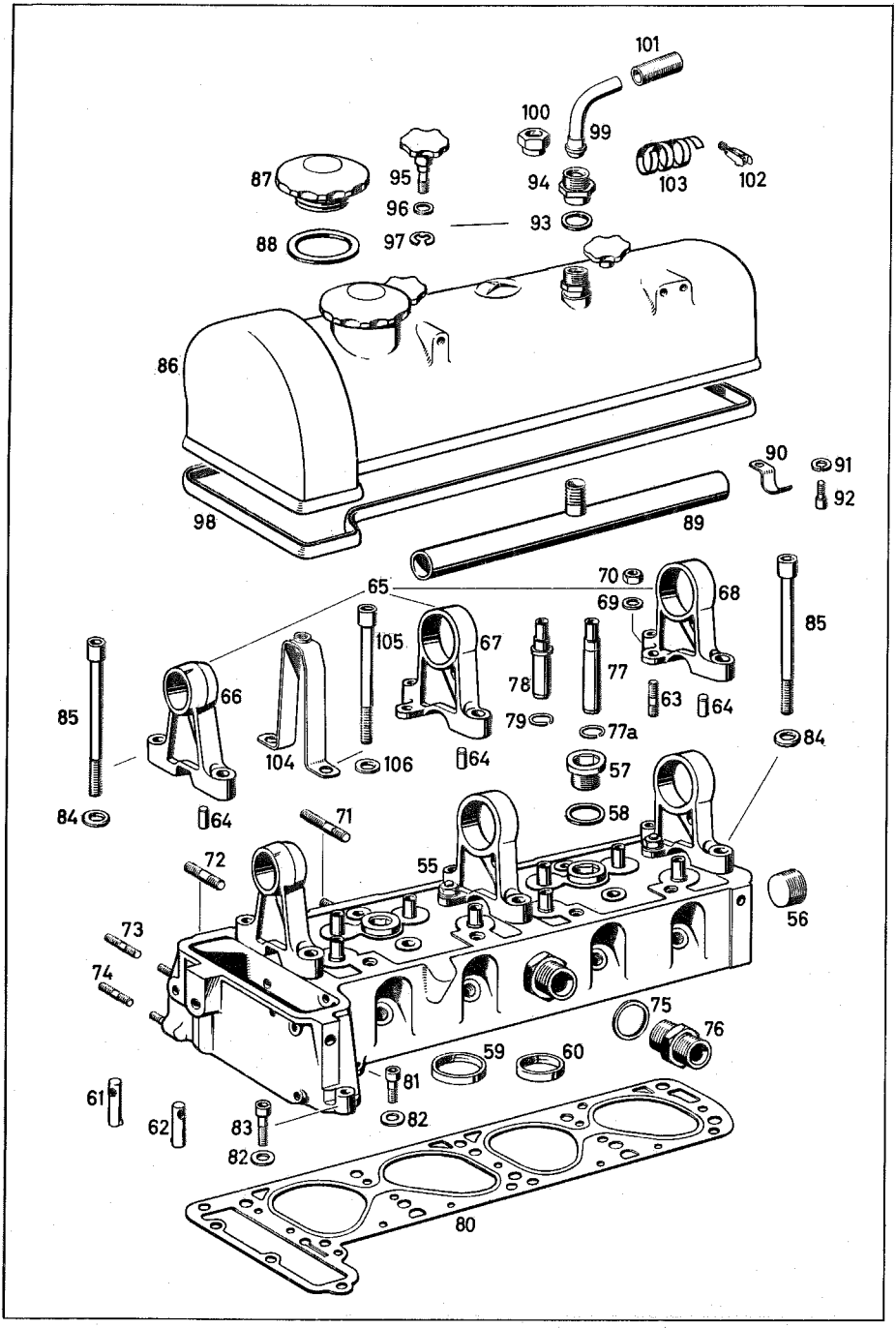
101
100
99
87
95
94
103
102
96
93
88
97
86
90
91
92
98
89
65
70
69
68
85
105
67
66
78
77
63
64
85
104
106
64
79
77a
84
84
64
57
58
71
72
55
56
73
74
75
76
59
60
61
81
62
83
82
82
80

Fig. No.	No. of spare part	Denomination	Quantity	Remarks
		CYLINDER HEAD		
-	121 010 19 20	Cylinder head with valves and camshaft	1	
55	121 010 20 20	Cylinder head with camshaft bearings, stud bolts and valve guides	1	
56	-	Screw plug M 30x1,5 DIN 906-4 S	1	)))
57	-	Screw plug M 30x1,5 DIN 908-4 S	2	) for locking) core holes)
58	-	Sealing ring A 30x36 DIN 7603 Al	2	))
59	121 053 02 31	Valve seat ring, standard) for) intake	4	
-	121 053 03 31	Valve seat ring, 49.3 dia.)	4	for repair design
60	121 053 02 32	Valve seat ring, standard) for) ex-	4	
-	121 053 03 32	Valve seat ring, 43.3 dia.) haust	4	for repair design
61	121 016 00 60	Water distributor	4	
62	620 016 00 60	Water distributor	1	
63	-	Stud bolt M 8x18 DIN 939-5 S	3	)) for camshaft
64	-	Cylindrical pin 8 h8x12 DIN 7 rounded	6	) bearing at) cylinder head))

Fig. No.	No. of spare part	Denomination	Quantity	Remarks
65	121 050 06 97	Set of camshaft bearings Interior dia. = standard (ready for installation)	1	
66	180 051 15 10	First camshaft bearing crank side Interior dia. 35 mm = standard	1	
67	180 051 16 12	Second camshaft bearing Interior dia. 45 mm = standard	1	
68	180 051 16 16	Third camshaft bearing flywheel side Interior dia. 46 mm = standard	1	
-	121 050 07 97	Set of camshaft bearings Interior dia. 0.1 mm narrower= repair size 0	1	
-	180 051 16 10	First camshaft bearing crank side Interior dia. 34,9 mm = repair size 0	1	
-	180 051 17 12	Second camshaft bearing Interior dia. 44.9 mm = repair size 0	1	
-	180 051 17 16	Third camshaft bearing flywheel side Interior dia. 45.9 mm = repair size 0	1	

Fig. No.	No. of spare part	Denomination	Quantity	Remarks
-	121 050 08 97	Set of camshaft bearings Interior dia. 0, 25 mm narrower= repair size I	1	
-	180 051 17 10	First camshaft bearing crank side Interior dia. 34, 75 mm = repair size I	1	
-	180 051 18 12	Second camshaft bearing Interior dia. 44. 75 mm = repair size I	1	
-	180 051 18 16	Third camshaft bearing flywheel side Interior dia. 45. 75 mm = repair size I	1	
69	-	Washer 8, 4 DIN 433	3	)for camshaft)bearing at
70	-	Hex. nut M 8 DIN 934-5 S	3	)cylinder head
71	-	Stud bolt M 10x52 DIN 835-5 S	4	)for suction) tube and ex-)haust manifold
72	-	Stud bolt M 10x28 DIN 835-5 S	2	)at cylinder)head
73	-	Stud bolt M 8x30 DIN 939-5 S (for cooling water discharge nipple at cylinder head)	2	
74	-	Stud bolt M 8x20 DIN 939-5 S (for housing, chain tightener at cylinder head)	1	

Fig. No.	No. of spare part	Denomination	Quantity	Remarks
75	-	Sealing ring A 30x36 DIN 7603 A1	1	)for warm water)heating)connection at
76	180 997 01 71	Connecting nipple	1	)cylinder head
77	121 050 00 24	Valve guide, intake	4	
77a	-	Snap ring 14 DIN 9045	4	
-	121 050 02 24	Valve guide, intake Interior dia. = standard Outer dia. = 14.20 mm	4	))))
-	-	Snap ring 14 DIN 9045	4	))for repair
-	121 050 03 24	Valve guide, intake Interior dia. = standard Outer dia. = 14,40 mm	4	) design)))
-	-	Snap ring 14 DIN 9045	4	)
78	121 050 01 24	Valve guide, exhaust	4	
79	-	Snap ring 14 DIN 9045	4	
-	121 050 04 24	Valve guide, exhaust Interior dia. = standard Outer dia. = 14.20 mm	4	))))
-	-	Snap ring 14 DIN 9045	4	))for repair
-	121 050 05 24	Valve guide, exhaust Interior dia. = standard Outer dia. = 14,40 mm	4	)design)))
-	-	Snap ring 14 DIN 9045	4	)

Fig. No.	No. of spare part	Denomination	Quantity	Remarks
80	121 016 03 20	Cylinder head gasket	1	)
81	-	Hex.-hd. socket screw M 8x20 DIN 912-8 G	2	)
82	-	Washer 8,4 DIN 433	3	)for cylinder head at cylinder
83	-	Hex.-hd. socket screw M 8x30 DIN 912-8 G	1	)crankcase
84	186 990 09 40	Washer	6	)
85	-	Hex.-hd. socket screw M 12x125 DIN 912-10 K	6	)
		CYLINDER HEAD COVER WITH BLEEDING		
86	121 010 03 30	Cylinder head cover, complete	1	
87	136 501 00 54	Screwed cover (for filling in oil)	1	
88	180 997 02 40	Sealing ring 47x65x3 (for screwed cover)	1	
89	121 010 00 70	Bleeder pipe	1	
90	180 995 07 01	Tube clamp	2	)for bleeder pipe at cylind.
91	-	Lock washer B 6 DIN 127	2	)head cover up to engine
92	-	Hex.-hd. socket screw M 6x12 DIN 912-8 G	2	)No. 65 00110

Fig. No.	No. of spare part	Denomination	Quantity	Remarks
93	-	Sealing ring A 16x22 DIN 7603 Al	1	)for bleeder)pipe at cylinder)head cover
94	180 997 02 72	Screwed nipple	1	)
95	180 010 00 94	Tightening screw (for cylinder head cover at cylinder head)	2	
96	-	Sealing ring C 8x14 DIN 7603 Cu-Asb.	2	)for tightening)screw at)cylinder head
97	-	Lock washer 6 DIN 6799	2	)cover
98	121 016 00 80	Gasket (for cylinder head cover)	1	
99	121 010 02 70	Bleeder pipe (from cyl. head cover to air filter)	1	
100	-	Box nut 13 M 22x1, 5 DIN 7606 (for bleeder pipe at cyl. head cover)	1	
101	180 997 10 82	Rubber hose	1	))
102	-	Hose clamp S 5 N 262	1	) for bleeder) pipe at cylinder
103	-	Hose strap 5x0, 35x200 N 263 (state length when ordering)	1	) head cover))
104	180 010 00 40	Clamp for cylinder head cover	2	
105	-	Hex. -hd. socket screw M 12x105 DIN 912-10 K	4	)for clamp resp.)cylinder head)at cylinder
106	-	Washer 13 DIN 433	4	)crankcase

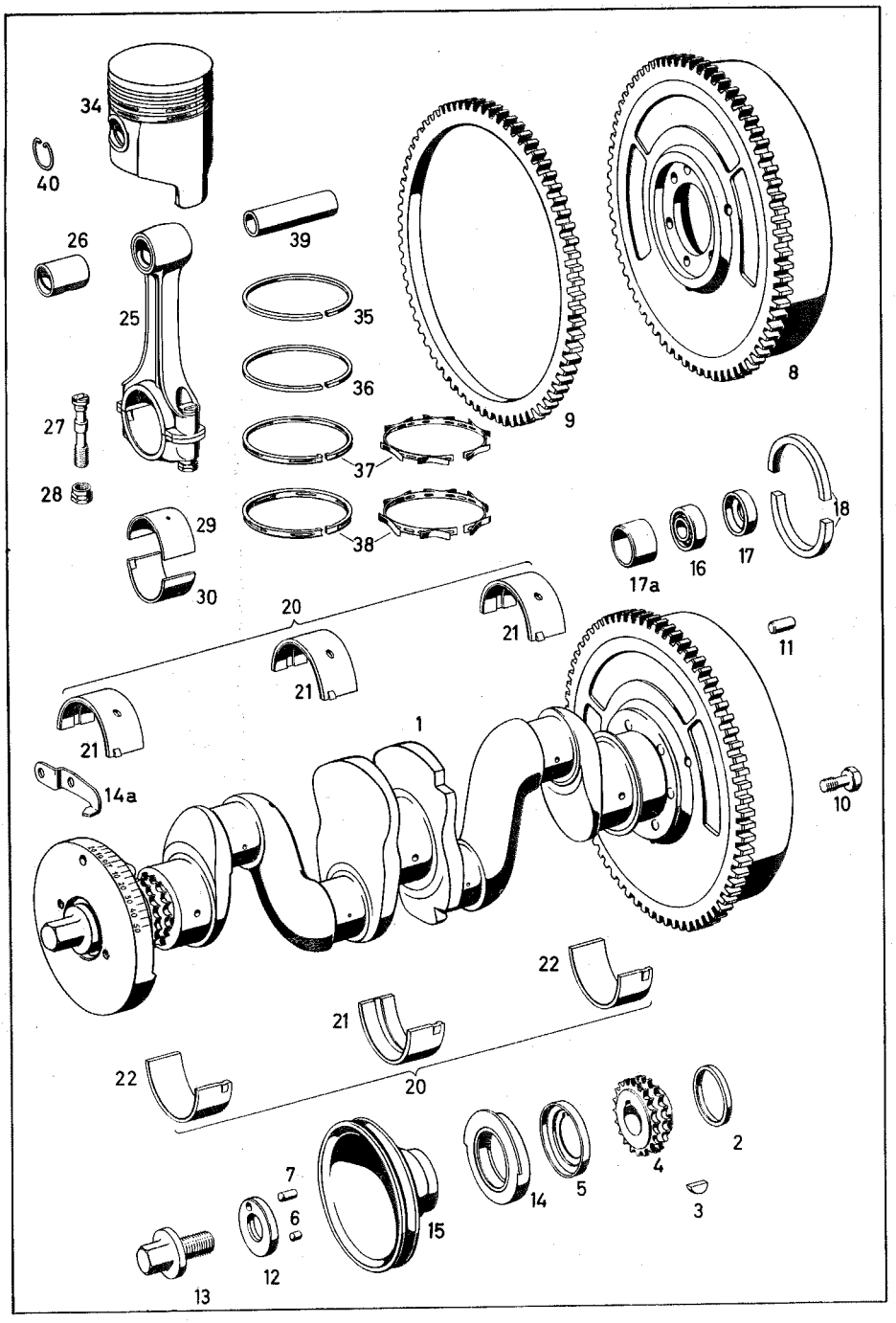
34
40
26
25
39
35
36
37
38
27
28
29
30
9
8
18
16
17
17a
20
21
11
1
14a
10
22
2
4
3
5
14
7
6
12
15
13

Fig. No.	No. of spare part	Denomination	Quantity	Remarks
		CRANKSHAFT		
-	121 030 37 01	Crankshaft with flywheel, collar screw, crankshaft bearing- and connecting rod bearing shells (Laucherthal), without damper plate	1	
-	121 030 39 01	Crankshaft with flywheel, collar screw, crankshaft bearing- and connecting rod bearing shells (Glyco), without damper plate	1	
1	121 030 35 01	Crankshaft with counterweight with flywheel	1	
2	180 031 00 52	Spacer 5.45 mm thick) optional	1	) for crankshaft gear at crankshaft)
-	180 031 01 52	Spacer 5.60 mm thick) optional	1	) for crankshaft gear at crankshaft)
-	180 031 02 52	Spacer 5.75 mm thick) optional	1	) for crankshaft gear at crankshaft)
-	180 031 03 52	Spacer 5.90 mm thick) optional	1	) for crankshaft gear at crankshaft)
-	180 031 04 52	Spacer 6.05 mm thick) optional	1	) for crankshaft gear at crankshaft)
3	-	Woodruff key 5x7, 5 DIN 6888	1	
4	180 052 02 03	Crankshaft gear	1	) on crankshaft, front)
5	180 031 04 25	Oil slider ring	1	)
-	121 031 01 07	Counterweight	1	for repair design

Fig. No.	No. of spare part	Denomination	Quantity	Remarks
6	-	Cylindrical pin 8 h8x8 DIN 7 rounded	1	))for counter-)weight at
7	-	Cylindrical pin 8 h8x16 DIN 7 rounded	1	) crankshaft)
8	121 030 03 05	Flywheel with ring gear	1	
9	121 032 00 05	Starter ring gear, 108 teeth	1	
10	121 031 06 71	Necked-down bolt	6	))for flywheel
11	-	Cylindrical pin 10 h8x18 DIN 7 rounded	1	)at crankshaft)
12	121 206 01 17	Washer (for hub - pulley)	1	up to engine No. 65 00024
13	186 031 02 71	Collar screw	1	
14	120 031 01 81	Sealing ring (at crankshaft, front)	1	
14a	121 032 00 15	Adjusting needle (for TDC adjustment)	1	
15	121 200 01 05	Pulley	1	
16	-	Annular grooved bearing 6202 DIN 625	1	))for drive shaft)at crankshaft
17	186 031 00 33	Cover	1	)
17a	121 031 00 53	Spacer sleeve (in crankshaft for annular grooved bearing)	1	

Fig. No.	No. of spare part	Denomination	Quantity	Remarks
18	-	Fiber sealing ring 75 x 87 x 6 GL N 255 a (for crankshaft sealing in cylinder crankcase, rear)	1	
		CRANKSHAFT BEARING		
20	121 030 05 97	Set of crankshaft bearing shells Interior dia. 70 mm = standard	1	optional
-	621 030 00 97	Set of crankshaft bearing shells Interior dia. 70 mm = standard	1	optional
21	121 033 14 01	Crankshaft bearing shell with groove	4	optional
-	621 033 00 01	Crankshaft bearing shell with groove	4	optional
22	121 033 14 02	Crankshaft bearing shell without groove	2	optional
-	621 033 00 02	Crankshaft bearing shell without groove	2	optional
-	121 030 06 97	Set of crankshaft bearing shells Interior dia. 69.75 mm = repair size I	1	optional, ready for installation
-	621 030 01 97	Set of crankshaft bearing shells Interior dia. 69.75 mm = repair size I	1	optional
-	121 033 15 01	Crankshaft bearing shell with groove	4	optional
-	621 033 01 01	Crankshaft bearing shell with groove	4	optional
-	121 033 15 02	Crankshaft bearing shell without groove	2	optional
-	621 033 01 02	Crankshaft bearing shell without groove	2	optional

Fig. No.	No. of spare part	Denomination	Quantity	Remarks
-	121 030 07 97	Set of crankshaft bearing shells Interior dia. 69.50 mm = repair size II	1	optional
-	621 030 02 97	Set of crankshaft bearing shells Interior dia. 69.50 mm = repair size II	1	optional
-	121 033 16 01	Crankshaft bearing shell) with groove	4	optional
-	621 033 02 01	Crankshaft bearing shell) with groove	4	optional
-	121 033 16 02	Crankshaft bearing shell) without groove	2	optional
-	621 033 02 02	Crankshaft bearing shell) without groove	2	optional
-	121 030 08 97	Set of crankshaft bearing shells Interior dia. 69.25 mm = repair size III	1	optional, ready for installation
-	621 030 03 97	Set of crankshaft bearing shells Interior dia. 69.25 mm = repair size III	1	optional
-	121 033 17 01	Crankshaft bearing shell) with groove	4	optional
-	621 033 03 01	Crankshaft bearing shell) with groove	4	optional
-	121 033 17 02	Crankshaft bearing shell) without groove	2	optional
-	621 033 03 02	Crankshaft bearing shell) without groove	2	optional

Fig. No.	No. of spare part	Denomination	Quantity	Remarks
-	121 030 09 97	Set of crankshaft bearing shells Interior dia. 69.00 mm = repair size IV	1	optional
-	621 030 05 97	Set of crankshaft bearing shells Interior dia. 69.00 mm = repair size IV	1	optional
-	121 033 18 01	Crankshaft bearing shell with groove	4	optional ready for installation
-	621 033 04 01	Crankshaft bearing shell with groove	4	optional ready for installation
-	121 033 18 02	Crankshaft bearing shell without groove	2	optional
-	621 033 04 02	Crankshaft bearing shell without groove	2	optional
		CONNECTING ROD		
25	121 030 15 20	Connecting rod without bearing	4	
26	186 038 07 50	Connecting rod bushing	4	
27	121 038 03 71	Connecting rod screw	8	
28	182 038 00 72	Nut	8	
-	186 038 08 50	Connecting rod bushing Outer dia. 28.5 mm	4	for repair design
29	121 038 28 10	Connecting rod bearing shell upper half Interior dia. 52.00 mm = standard	4	optional
-	121 038 07 10	Connecting rod bearing shell upper half Interior dia. 52.00 mm = standard	4	optional ready for installation

Fig. No.	No. of spare part	Denomination	Quantity	Remarks
-	121 038 29 10	Connecting rod bearing shell upper half Interior dia. 51,75 mm=rep. size I	4	optional
-	121 038 08 10	Connecting rod bearing shell upper half Interior dia. 51.75mm=rep. size I	4	
-	121 038 30 10	Connecting rod bearing shell upper half Interior dia. 51.50 mm=rep. size II	4	optional
-	121 038 09 10	Connecting rod bearing shell upper half Interior dia. 51.50 mm=rep. size II	4	
-	121 038 31 10	Connecting rod bearing shell upper half Interior dia. 51.25 mm=rep. size III	4	optional ready for installation
-	121 038 10 10	Connecting rod bearing shell upper half Interior dia. 51.25 mm=rep. size III	4	
-	121 038 32 10	Connecting rod bearing shell upper half Interior dia. 51.00 mm=rep. size IV	4	optional
-	121 038 11 10	Connecting rod bearing shell upper half Interior dia. 51.00 mm=rep. size IV	4	
30	121 038 28 11	Connecting rod bearing shell lower half Interior dia. 52.00 mm = standard	4	optional
-	121 038 07 11	Connecting rod bearing shell lower half Interior dia. 52.00 mm = standard	4	

16/024

Fig. No.	No. of spare part	Denomination	Quantity	Remarks
-	121 038 29 11	Connecting rod bearing shell lower half Interior dia. 51.75 mm=rep. size I	4	optional
-	121 038 08 11	Connecting rod bearing shell lower half Interior dia. 51.75 mm=rep. size I	4	optional
-	121 038 30 11	Connecting rod bearing shell lower half Interior dia. 51.50 mm=rep. size II	4	optional
-	121 038 09 11	Connecting rod bearing shell lower half Interior dia. 51.50 mm=rep. size II	4	optional
-	121 038 31 11	Connecting rod bearing shell lower half Interior dia. 51.25 mm=rep. size III	4	optional
-	121 038 10 11	Connecting rod bearing shell lower half Interior dia. 51.25 mm=rep. size III	4	optional
-	121 038 32 11	Connecting rod bearing shell lower half Interior dia. 51.00 mm=rep. size IV	4	optional
-	121 038 11 11	Connecting rod bearing shell lower half Interior dia. 51.00 mm=rep. size IV	4	optional

ready for installation

Fig. No.	No. of spare part	Denomination	Quantity	Remarks
		PISTON		
34	121 030 02 17	Piston with pin and rings for cylinder dia. 85.00 mm = standard	4	
35	001 037 38 16	Compression ring (piston groove I)	4	
36	001 037 43 16	Tapered compression piston ring (piston groove II)	4	
37	000 037 00 17	Novix stepped ring (piston groove III)	4	
38	000 037 29 18	Novix slotted ring (piston groove IV)	4	
39	-	Piston pin D 25x18x72 DIN 73121 K	4	
40	-	Wire snap ring A 25 DIN 73123	8	
-	121 030 03 17	Piston with pin and rings for cylinder dia. 85.25 mm = repair size 0	4	
-	001 037 39 16	Compression ring (piston groove I)	4	
-	001 037 44 16	Tapered compression piston ring (piston groove II)	4	
-	000 037 11 17	Novix stepped ring (piston groove III)	4	

Fig. No.	No. of spare part	Denomination	Quantity	Remarks
-	000 037 69 18	Novix slotted ring (piston groove IV)	4	
-	-	Piston pin D 25x18x72 DIN 73121 K	4	
-	-	Wire snap ring A 25 DIN 73123	8	
-	121 030 04 17	Piston with pin and rings for cylinder dia. 85.50 mm = repair size I	4	
-	001 037 40 16	Compression ring (piston groove I)	4	
-	001 037 45 16	Tapered compression piston ring (piston groove II)	4	
-	000 037 01 17	Novix stepped ring (piston groove III)	4	
-	000 037 36 18	Novix slotted ring (piston groove IV)	4	
-	-	Piston pin D 25x18x72 DIN 73121 K	4	
-	-	Wire snap ring A 25 DIN 73123	8	
-	121 030 05 17	Piston with pin and rings for cylinder dia. 86.00 mm = repair size II	4	
-	001 037 41 16	Compression ring (piston groove I)	4	

Fig. No.	No. of spare part	Denomination	Quantity	Remarks
-	001 037 46 16	Tapered compression piston ring (piston groove II)	4	
-	000 037 02 17	Novix stepped ring (piston groove III)	4	
-	000 037 37 18	Novix slotted ring (piston groove IV)	4	
-	-	Piston pin D 25x18x72 DIN 73121 K	4	
-	-	Wire snap ring A 25 DIN 73123	8	
-	121 030 06 17	Piston with pin and rings for cylinder dia. 86.5 mm = repair size III	4	
-	001 037 42 16	Compression ring (piston groove I)	4	
-	001 037 47 16	Tapered compression piston ring (piston groove II)	4	
-	000 037 03 17	Novix stepped ring (piston groove III)	4	
-	000 037 38 18	Novix slotted ring (piston groove IV)	4	
-	-	Piston pin D 25x18x72 DIN 73121 K	4	
-	-	Wire snap ring A 25 DIN 73123	8	

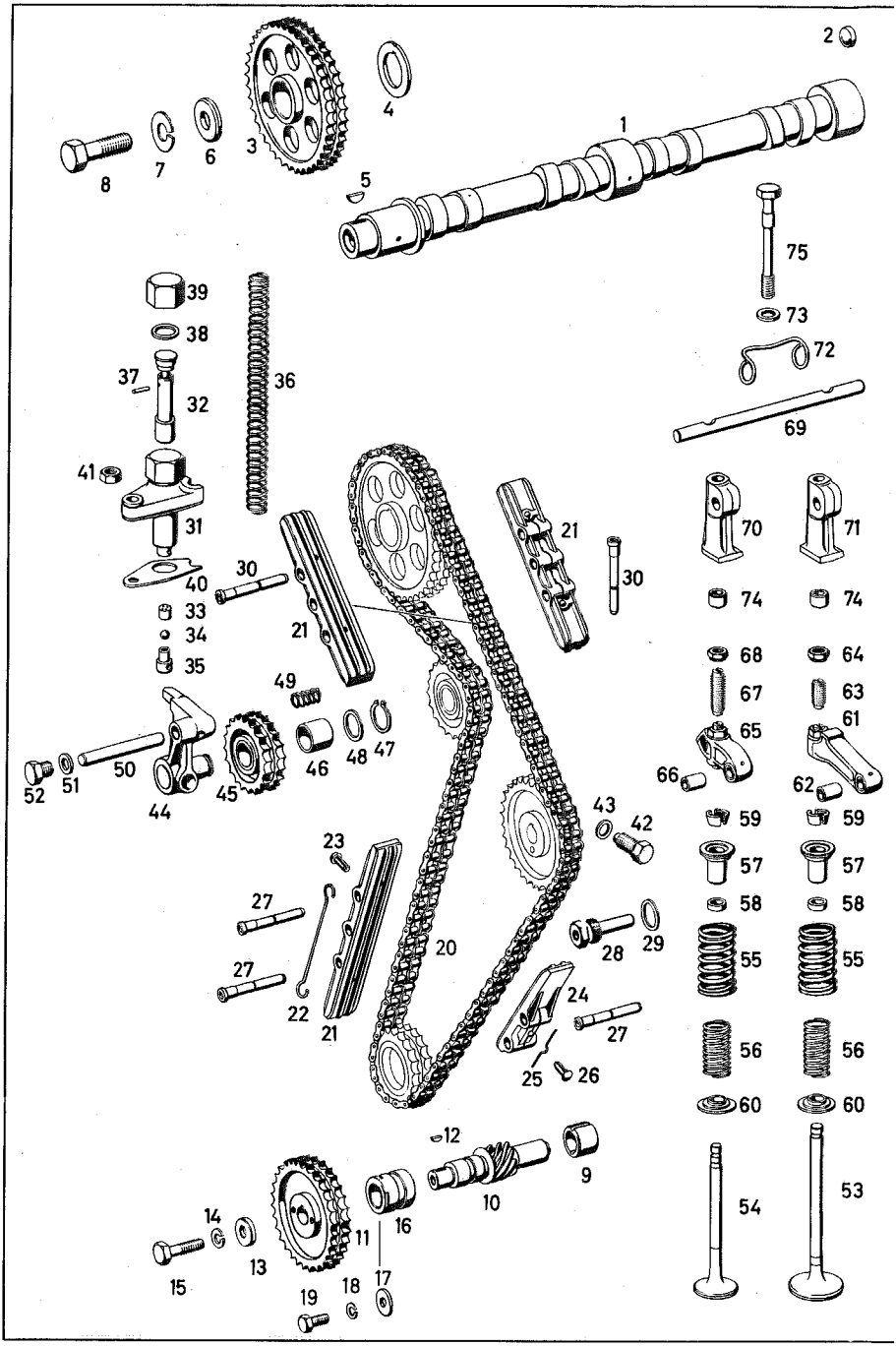
1
2
3
4
5
6
7
8
9
10
11
12
13
14
15
16
17
18
19
20
21
22
23
24
25
26
27
28
29
30
31
32
33
34
35
36
37
38
39
40
41
42
43
44
45
46
47
48
49
50
51
52
53
54
55
56
57
58
59
60
61
62
63
64
65
66
67
68
69
70
71
72
73
74
75

Fig. No.	No. of spare part	Denomination	Quantity	Remarks
		CAMSHAFT		
1	121 050 00 01	Camshaft	1	
2	-	Cover 16 DIN 443	1	
3	180 052 03 01	Camshaft gear	1	
4	186 052 04 52	Shim, 2.50 mm thick)	1	)
-	186 052 01 52	Shim, 2.75 mm thick)	1	)
-	186 052 00 52	Shim, 3.00 mm thick) optional	1	)
-	186 052 02 52	Shim, 3.25 mm thick)	1	)
-	186 052 03 52	Shim, 3.50 mm thick)	1	) for camshaft gear at camshaft
5	-	Woodruff key 4x6, 5 DIN 6888	1	)
6	180 990 03 40	Washer	1	)
7	-	Lock washer B 14 DIN 127	1	)
8	-	Hex.-hd. screw M 14x1, 5x40 DIN 960-8 G	1	)
		TIMING GEAR		
9	180 0 52 10 06	Bushing (for intermediate sprocket shaft, rear)	1	
10	121 052 00 05	Intermediate sprocket shaft	1	

Fig. No.	No. of spare part	Denomination	Quantity	Remarks
11	180 052 03 02	Intermediate sprocket	1	
12	-	Woodruff key 3x3, 7 DIN 6888	1	)
13	180 990 06 40	Washer	1	) for intermed. sprocket at intermediate sprocket shaft
14	-	Lock washer B 8 DIN 127	1	)
15	-	Hex.-hd. screw M 8x30 DIN 933-8 G	1	)
16	180 052 04 06	Bushing (for intermediate sprocket shaft, front)	1	
17	180 990 01 40	Washer	1	)
18	-	Lock washer B 6 DIN 127	1	) for bushing at cylinder crankcase
19	-	Hex.-hd. screw M 6x12 DIN 933-8 G	1	)
20	121 052 00 10	Double roller chain	1	
-	121 052 01 10	Double roller chain	1	for repair design
21	180 050 08 16	Sliding rail with locking wire	3	
22	180 052 00 76	Locking wire for sliding rail	3	
23	-	Button-hd. grooved nail 4x8 DIN 1476 (for locking wire at sliding rail)	6	
24	180 050 07 16	Sliding rail with locking wire	1	
25	180 052 01 76	Locking wire (for sliding rail)	1	

Fig. No.	No. of spare part	Denomination	Quantity	Remarks
26	-	Button-hd. grooved nail 4x8 DIN 1476 (for locking wire at sliding rail)	1	
27	180 052 09 74	Pin 51 mm long	3	))for sliding rail
28	180 050 00 74	Pin	1	) at cylinder) crankcase
29	-	Sealing ring A 20x24 DIN 7603 A1	1	)
30	180 052 10 74	Pin 58 mm long (for sliding rail at cylinder head)	4	
31	121 050 03 11	Chain tightener	1	
32	180 050 01 74	Pressure pin with pressure sleeve	1	
33	180 052 00 35	Ball cage	1	
34	-	Steel ball 5 mm III DIN 5401	1	
35	121 052 00 34	Head piece (for pressure sleeve at chain tightener)	1	
36	121 993 02 01	Pressure spring	1	
37	-	Cylindrical pin 1, 5 m6x8 DIN 7 rounded	1	
38	-	Sealing ring A 18x22 DIN 7603 A1	1	
39	180 052 02 32	Cap	1	
40	180 052 03 80	Gasket	1	)for chain)tightener at
41	-	Hex. nut M 8 DIN 934-5 S	1	)cylinder head

Fig. No.	No. of spare part	Denomination	Quantity	Remarks
42	186 052 02 71	Locking screw	1	)for chain
43	-	Sealing ring A 12x16 DIN 7603 A1	1	)tightener at)cylinder head
44	121 050 01 10	Tensioner gear mounting with conical plug	1	
45	180 050 01 09	Tensioner gear with bushing	1	
46	180 052 00 50	Bushing	1	
47	-	Circlip 20x1, 2 DIN 471	1	)for tensioner) gear at tension.
48	180 990 02 40	Washer	1	) gear mounting
49	186 993 11 01	Pressure spring	1	) for tensioner) gear mounting
50	121 052 02 74	Pin	1	) with tensioner) gear at cylin-
51	-	Sealing ring A 12x16 DIN 7603 A1	1	) der head)
52	-	Screw plug AM 12x1, 5 DIN 7604	1	)
		VALVES		
53	121 053 00 01	Intake valve	4	
54	121 053 01 05	Exhaust valve	4	
55	180 053 03 20	Outer valve spring	8	
56	180 053 03 22	Inner valve spring	8	
57	180 050 05 23	Valve spring retainer with sealing ring holder	8	
-	180 050 06 23	Valve spring retainer with sealing ring holder	8	for repair design

Fig. No.	No. of spare part	Denomination	Quantity	Remarks
58	180 053 06 60	Sealing ring	8	
59	180 053 01 27	Valve cone half	16	
60	121 053 01 62	Pressure ring		
		ROCKER ARM		
61	180 050 03 33	Rocker arm for intake	4	
62	180 055 01 50	Bushing	4	
63	180 055 05 71	Adjusting screw	4	
64	153 990 02 51	Hex. nut	4	
65	180 050 03 34	Rocker arm for exhaust	4	
66	180 055 01 50	Bushing	4	
67	180 055 04 71	Adjusting screw	4	
68	153 990 02 51	Hex. nut	4	
69	121 055 02 05	Rocker arm axis	2	
70	180 055 14 10	Rocker arm support (for cylinder 1 and 3)	2	
71	180 055 15 10	Rocker arm support (for cylinder 2 and 4)	2	
72	180 055 00 93	Yoke	4	
73	-	Washer 10, 5 DIN 433	4	for rocker arm support at cylinder head
74	180 055 01 75	Adjusting sleeve	4	
75	180 055 07 71	Expanding screw	4	

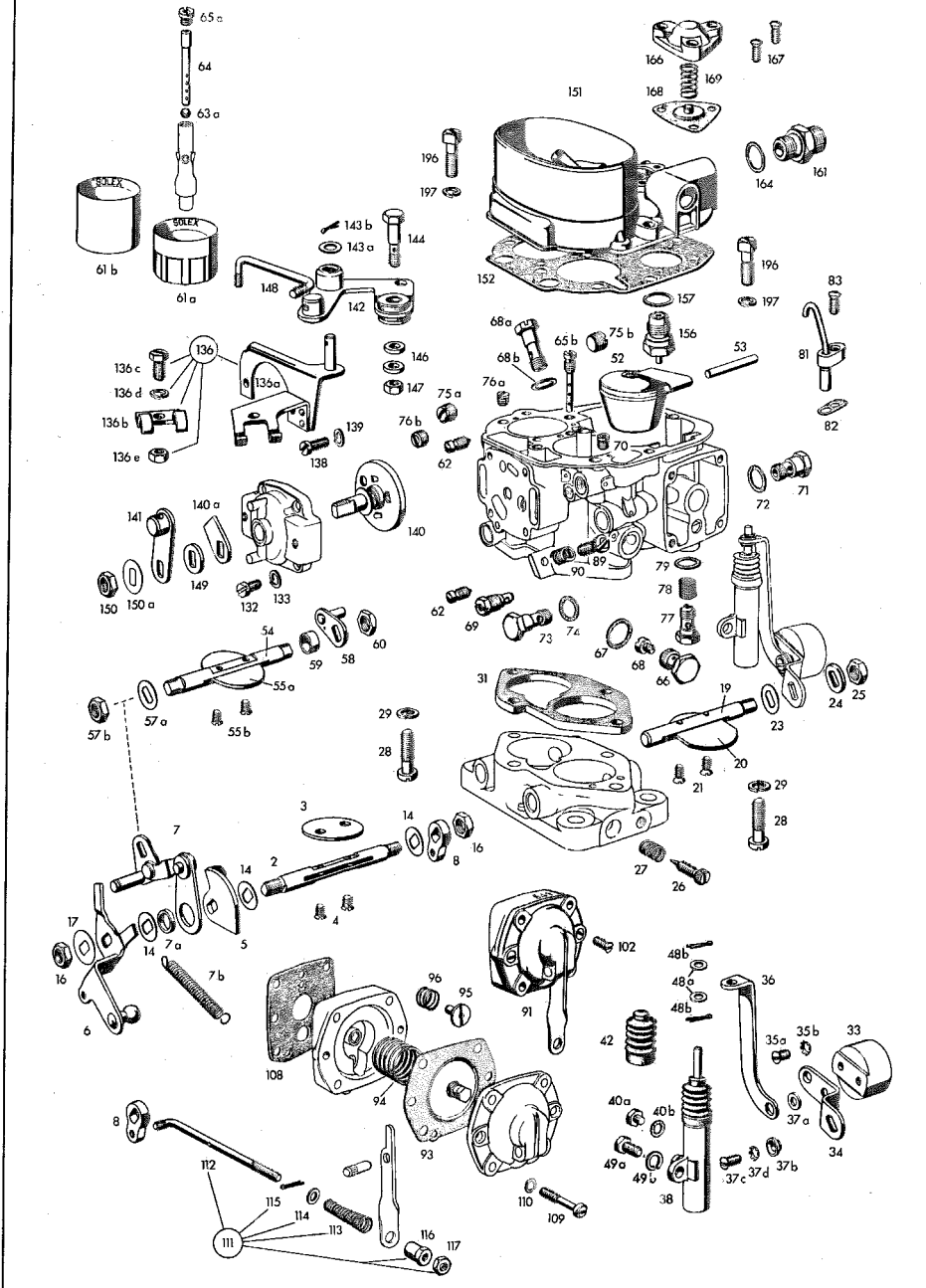
65a
64
63a
SOLEX
SOLEX
61b
61a
148
142
143b
143a
144
196
197
151
152
166
167
169
168
164
161
157
196
197
83
81
82
68a
68b
65b
75b
156
52
53
76a
75a
76b
62
70
72
71
136
136c
136d
136b
136e
136a
146
147
139
138
140
140a
141
149
150
150a
132
133
90
89
79
78
77
62
69
73
74
67
68
66
54
59
58
60
55a
57a
57b
55b
31
19
23
24
25
20
21
29
28
27
26
3
14
16
8
2
4
7
7a
7b
5
17
16
6
102
91
48b
48a
36
42
35a
35b
33
37a
34
40a
40b
49a
49b
37c
37d
37b
38
96
95
108
94
93
110
109
8
112
115
114
113
111
116
117

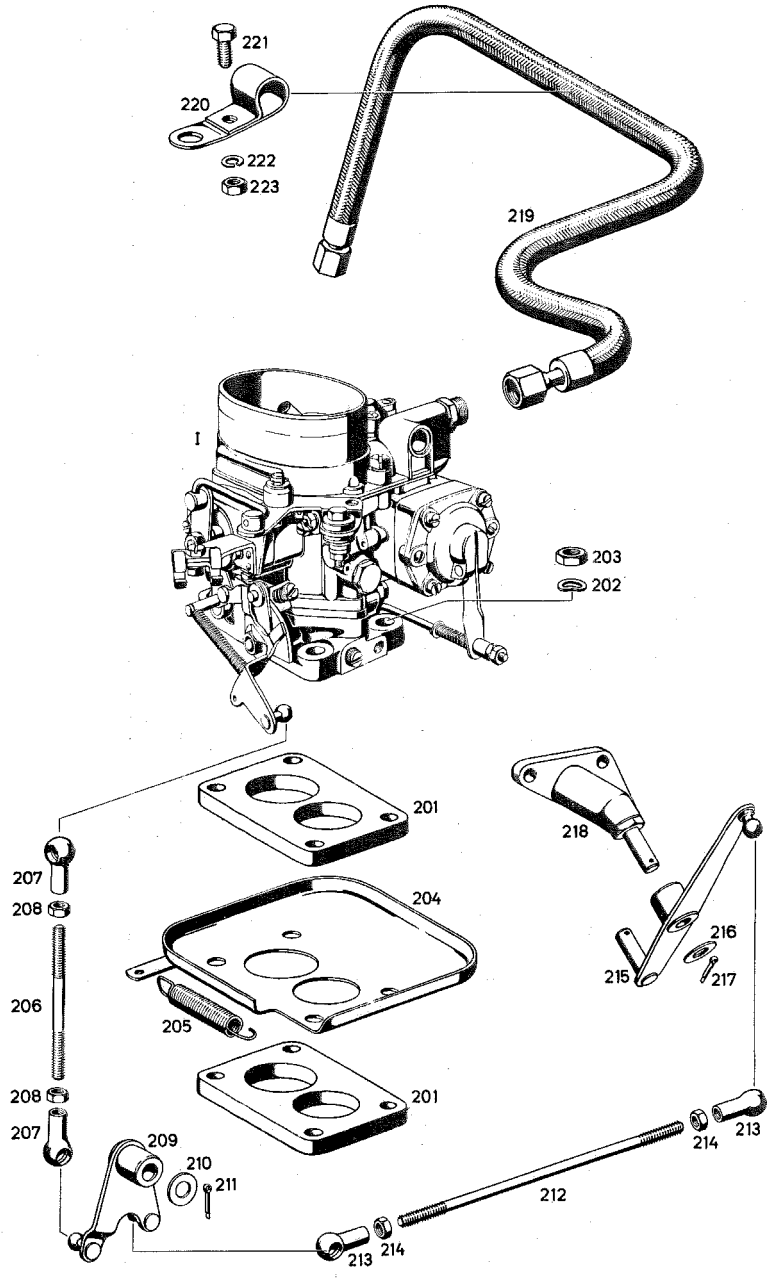
221
220
222
223
219
I
203
202
201
207
208
204
206
205
218
216
215
217
208
201
207
209
210
211
214
213
212
213
214

Fig. No.	No. of spare part	Denomination	Quantity	Remarks
		CARBURETTOR		
1	000 071 54 01	Carburettor 32 PAJTA	1	
2	000 071 17 11	Throttle shaft, first barrel (in throttle part)	1	
3	000 071 04 10	Throttle shaft 3°, first barrel (in throttle part)	1	
4	000 071 36 71	Lens-hd. countersunk screw M 4x0, 75x6, 5 (for throttle mounting, 1st barrel)	2	
5	000 071 13 12	Bearing	1	
6	000 070 06 21	Throttle lever, complete	1	
6a	000 072 00 53	Spacer bushing (for throttle lever)	1	
7	000 070 07 21	Follower arm, follower rod and drag link, complete	1	
7a	000 071 08 15	Tension spring (between throttle lever and follower arm)	1	
8	000 071 04 22	Transmitting lever (for mechanic pump)	1	
14	000 071 01 76	Spacer (between throttle housing and bearing and transmitting lever, first barrel)	3	
16	000 071 04 72	Hex. nut M 8 x 1 (for throttle shaft, first barrel)	2	

Fig. No.	No. of spare part	Denomination	Quantity	Remarks
17	000 994 02 10	Lock washer (for hex. nut at throttle lever)	1	
19	000 071 18 11	Vacuum-operated throttle shaft (for throttle)	1	
20	000 071 12 10	Vacuum-operated throttle 17° (in throttle housing)	1	
21	000 071 55 71	Lens-hd. countersunk screw M 4x0, 75x8, 2 (for mounting vacuum-operated throttle, second barrel)	2	
23	000 071 01 76	Spacer washer (for vacuum-operated throttle shaft between housing and counterweight lever)	1	
24	000 071 00 62	Washer (for vacuum-operated throttle shaft)	1	
25	000 071 04 72	Hex. nut (for vacuum-operated throttle shaft)	1	
26	000 071 42 71	Idling mixture adjusting screw M 5x0, 75	1	
27	000 071 12 16	Pressure spring (for idling mixture adjusting screw)	1	
28	000 071 43 71	Dismounting screw	4	)for throttle
29	000 990 05 47	Lock washer	4	) housing at) float chamber

Fig. No.	No. of spare part	Denomination	Quantity	Remarks
31	000 071 19 80	Insulating flange (between throttle housing and float chamber)	1	
33	000 071 01 57	Counterweight 48 g	1	
34	000 071 21 22	Lever for counterweight	1	
35a	000 071 45 71	Lens-hd. countersunk serew M 4x0, 75x7, 5 (for lever at counterweight)	1	
35b	-	Toothed washer V 4, 3 DIN 6797 (for lens-hd. countersunk screw)	1	
36	000 071 22 22	Transmitting lever (for shock absorber)	1	
37a	000 071 07 62	Washer	1	)for
37b	136 072 00 50	Bushing	1	)transmitting) lever
37c	000 071 35 71	Lens-hd. countersunk screw M 4x0, 75x12 (for transmitting lever at counterweight)	1	
37d	-	Toothed washer V 4,3 DIN 6797 (for lens-hd. countersunk screw)	1	
38	000 070 01 67	Shock absorber, complete	1	
40a	000 071 69 71	Hex. -hd. screw M 4x0, 75x5 (for oil filling)	1	
40b	-	Sealing ring A 4x8 DIN 7603 fiber	1	for hex. -hd. screw

Fig. No.	No. of spare part	Denomination	Quantity	Remarks
42	000 071 00 91	Bellows (for pushrod - cylinder)	1	
48a	-	Washer 4, 2 DIN 125 (for shock absorber and transmitting lever)	2	
48b	-	Cotter pin 1, 5x10 DIN 94 (for washer)	2	
49a	000 071 44 71	Hex.-hd. screw M 5x0, 75x10	1	)for shock
49b	-	Lock washer B 5 DIN 127	1	)absorber at)float chamber
52	000 071 08 43	Float 7.3 g	1	
53	000 071 03 77	Shaft (for float)	1	
54	000 071 19 11	Throttle shaft, second barrel	1	
55a	000 071 11 10	Throttle 17°, second barrel (in float chamber)	1	
55b	000 071 36 71	Lens-hd. countersunk screw M 4x0, 75x6, 5 (for throttle, second barrel)	2	
57a	000 071 01 76	Spacer washer (for throttle shaft, second barrel between housing and stop lever)	1	
57b	000 071 04 72	Hex. nut (for throttle shaft, second barrel)	1	
58	000 071 06 22	Stop lever (on throttle shaft, second barrel)	1	

Fig. No.	No. of spare part	Denomination	Quantity	Remarks
59	000 071 04 53	Spacer bushing (between float chamber and stop lever)	1	
60	000 071 08 72	Hex. nut with chamfer (for throttle shaft, second barrel)	1	
61a	000 071 19 42	Venturi tube size 23, first barrel	1	
61b	000 071 20 42	Venturi tube size 25, 2nd barrel	1	
62	000 071 32 71	Locking screw M 6 (for venturi tube)	2	
63a	000 071 03 20	Ball (for mixing tube carrier)	1	
64	000 071 10 49	Mixing tube No. 44	1	
65a	000 071 18 34	Air correction jet, size 180 first barrel	1	
65b	000 071 38 34	Air correction jet with mixing tube, size 200, second barrel	1	
66	000 071 05 41	Main jet carrier, first barrel	1	
67	000 071 04 80	Sealing ring for main jet carrier first barrel	1	
68	000 071 31 35	Main jet, size 125, first barrel	1	
68a	000 071 55 35	Main jet, size 170, second barrel	1	
68b	000 071 05 60	Sealing ring (for main jet, second barrel)	1	
69	000 071 15 36	Idling jet, size 50, first barrel	1	

Fig. No.	No. of spare part	Denomination	Quantity	Remarks
70	000 071 03 39	Idling jet, size 1.5, first barrel	1	
71	000 071 14 37	Starting fuel jet, size 110	1	
72	000 071 05 60	Sealing ring (for starting fuel jet)	1	
73	000 071 04 86	Pump jet, size 80	1	
74	000 071 05 60	Sealing ring (for pump jet)	1	
75a	000 071 01 70	Set-screw M 8 x 1	1	instead of a 2nd main jet
75b	000 071 02 70	Set-screw M 9 x 1	1	below main jet 2nd barrel
76a	000 071 00 70	Setscrew M 6	1	instead of a 2nd idling jet
76b	000 071 03 70	Setscrew M 7 x 1	1	left besides starter motor
77	000 070 01 46	Ball valve, complete	1	
78	000 071 01 09	Strainer	1	) for ball
79	000 071 05 60	Sealing ring	1	) valve)
81	000 070 07 73	Injection pipe, complete	1	
82	000 071 05 80	Gasket 0.5 mm thick (for injection pipe)	1	
83	000 071 35 71	Lens-hd. countersunk screw M 4x0, 75x12 (for injection pipe mounting)	1	

Fig. No.	No. of spare part	Denomination	Quantity	Remarks
89	000 071 66 71	Idling adjusting screw M 5x0, 75	1	
90	000 071 12 16	Pressure spring (for idling adjusting screw)	1	
91	000 070 08 52	Diaphragm pump, complete	1	
93	000 073 02 05	Diaphragm, complete	1	
94	000 071 05 16	Spring (for diaphragm)	1	
95	000 073 02 46	Valve	1	
96	000 073 00 57	Valve spring	1	
102	000 071 40 71	Lens-hd. countersunk screw M 4 x0, 75 x 10 (for mounting valve on bottom part)	2	
108	000 071 18 80	Gasket (between diaphragm pump and float chamber)	1	
109	000 071 41 71	Cylinder head screw M 4 x 0, 75 x 24, 5 (for diaphragm pump at carburettor housing)	4	
110	-	Lock washer B 4 DIN 127 (for diaphragm pump at carburettor housing)	4	
111	000 070 02 76	Connecting bar M 4 x 0, 75 (between pump lever and transmitting lever)	1	
112	000 071 12 24	Connecting bar M 4x0, 75	1	

Fig. No.	No. of spare part	Denomination	Quantity	Remarks
113	000 071 06 15	Spring	1	
114	-	Washer 4, 3 DIN 433	1	
115	-	Cotter pin 1, 5x10 DIN 94	1	
116	000 071 06 72	Nut M 4 x 0, 75 (for connection rod)	1	
117	000 071 07 72	Hex. nut M 4 x 0, 75	1	
132	000 071 70 71	Cylinder head screw M 4x0,75x12	4	) for mounting
133	-	Lock washer B 4 DIN 127	4	) choke body
136	000 070 00 40	Bowden cable bracket, compl.	1	
136a	000 072 00 40	Bowden cable bracket	1	
136b	000 072 00 41	Clamp	1	
136c	000 071 44 71	Hex.-hd. screw M 5 x 0, 75	1	
136d	-	Lock washer B 5 DIN 127	1	
136e	000 071 13 72	Hex. nut M 5 x 0, 75	1	
138	000 990 18 20	Cylinder head screw	2	)for Bowden
139	-	Lock washer B 4 DIN 127	2	)cable bracket)and bracket at) carburettor
140	000 071 14 30	Choke valve, complete	1	
140a	000 072 00 23	Stop	1	
141	000 070 08 21	Choke lever, complete	1	

Fig. No.	No. of spare part	Denomination	Quantity	Remarks
142	000 070 09 21	Angular lever, complete	1	
143a	-	Washer 6, 4 DIN 125 (for angular lever)	1	
143b	-	Cotter pin 1, 5 x 10 DIN 94 (for angular lever)	1	
144	000 071 73 71	Clamping screw (at angular lever)	1	
146	-	Washer 5 x 10 x 2 DIN 988 (for clamping screw at angular lever)	2	
147	000 071 13 72	Hex. nut (for clamping screw at angular lever)	1	
148	000 071 13 24	Connection rod (between choke lever and angular lever)	1	
149	000 071 00 62	Washer	1	for starter shaft
150	000 071 04 72	Hex. nut	1	for starter shaft
150a	000 994 02 10	Lock washer (for hex. nut)	1	
151	000 071 20 04	Carburettor cover	1	
152	000 071 20 80	Gasket (for carburettor cover)	1	
156	000 071 01 44	Float needle valve M 12 x 1, 25; 2 mm	1	

Fig. No.	No. of spare part	Denomination	Quantity	Remarks
157	000 997 28 40	Sealing ring 12x16x1 Cu (under float needle valve)	1	
161	-	Screwed nipple 6 DIN 7627-5 S	1	)
164	-	Sealing ring A 12 x 16 DIN 7603 Fiber	1	)for fuel line)connection)
166	000 073 03 02	Valve cap	1	
167	000 071 35 71	Lens-hd. countersunk screw M 4 x 0, 75 x 12 (for valve cap at carburettor cover)	3	
168	000 070 07 52	Diaphragm, complete (starter air valve)	1	
169	000 071 14 16	Valve spring	1	
196	000 071 24 71	Square - hd. screw	4	
197	000 990 05 47	Lock washer	4	
201	188 141 01 62	Insulating flange	2	)
202	-	Lock washer B 8 DIN 137	4	) for carburettor) at intake tube)
203	000 990 08 51	Hex. nut	4	)
204	121 070 00 55	Screening plate, carburettor	1	
205	186 993 35 10	Release spring	1	
206	-	Pull rod 5x80x25/25 N 331	1	)for connection) between lever
207	-	Ball socket A 8 DIN 71805	2	) and throttle) housing

Fig. No.	No. of spare part	Denomination	Quantity	Remarks
208	-	Hex. nut M 5 DIN 934-5 S (for connection between lever and throttle housing)	2	
209	121 070 05 22	Lever, control	1	
210	-	Washer 8,4 DIN 125	1	) for lever
211	-	Cotter pin 2x15 DIN 94	1	) at pin
212	-	Pressure rod 5x170x25/25 N 331	1	)
213	-	Ball socket A 8 DIN 71805	2	) from lever to) double lever
214	-	Hex. nut M 5 DIN 934-5 S	2	)
215	121 070 02 22	Double lever	1	
216	-	Washer 8,4 DIN 125	1	) for double
217	-	Cotter pin 2 x 15 DIN 94	1	) lever at) bearing bracket
218	121 070 03 24	Support	1	
219	121 070 02 32	Fuel line, pump, carburettor	1	
220	180 995 03 01	Tube clamp (for fuel and vacuum line)	1	)
221	-	Hex.-hd. screw M 6x12 DIN 933-8 G	1	)
222	-	Lock washer B 6 DIN 127	1	) for fuel line) at engine
223	-	Hex. nut M 6 DIN 934-5 S	1	)

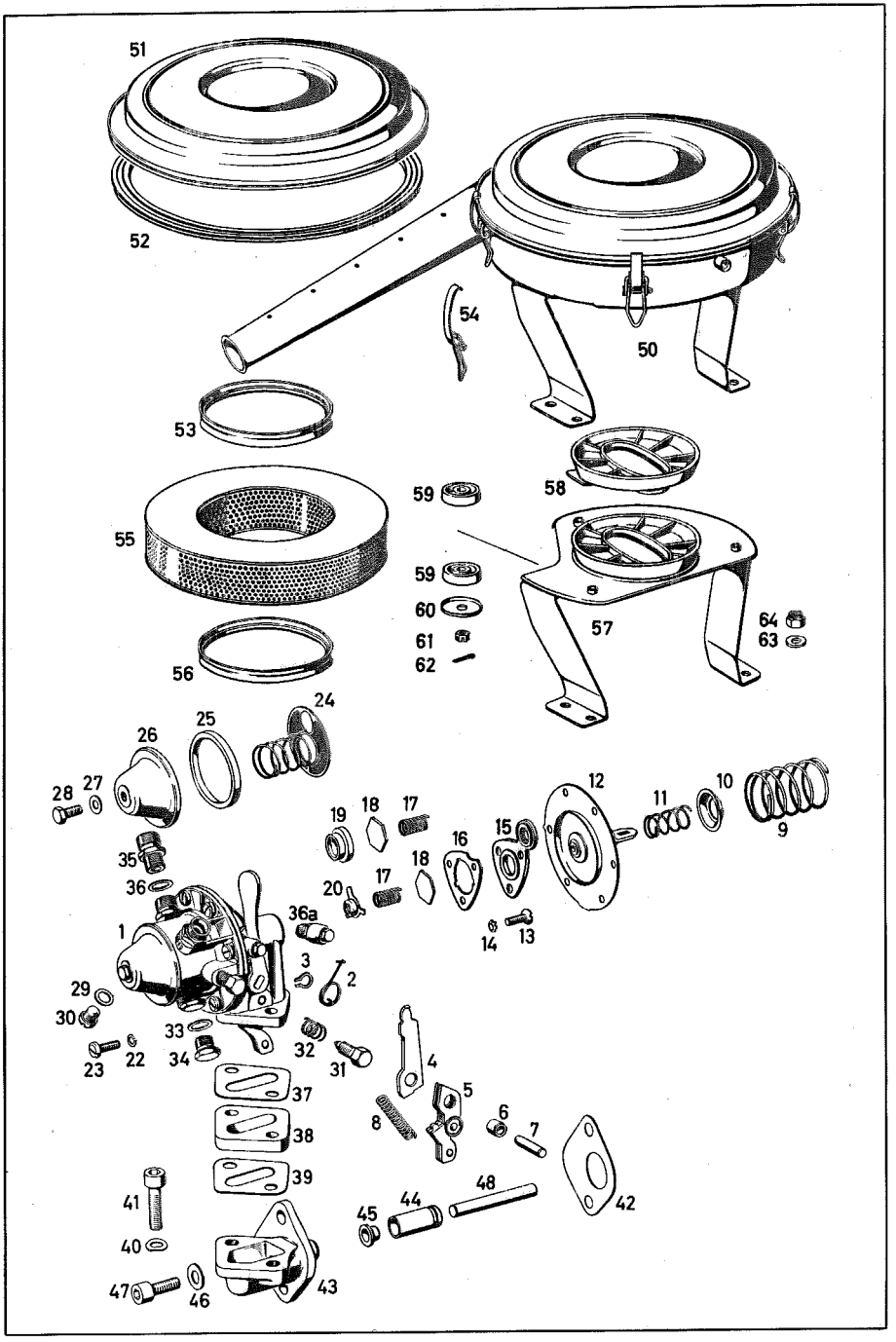
51
52
54
50
53
58
59
55
59
60
61
62
57
64
63
56
24
25
26
28
27
19
18
17
12
11
10
9
35
16
15
18
36
20
17
36a
14
13
1
3
2
29
30
33
32
31
4
23
22
34
37
5
8
6
7
38
39
41
48
44
45
42
40
47
46
43

Fig. No.	No. of spare part	Denomination	Quantity	Remarks
		FUEL FEED PUMP		
1	000 091 53 01	Fuel feed pump with dust filter	1	
2	000 993 09 10	Return spring for hand lever	1	
3	000 994 00 41	Circlip (for hand lever)	1	
4	000 091 01 18	Joint piece, (for pump lever)	1	
5	000 091 02 07	Pump lever	1	
6	000 091 00 50	Bushing)	1	
7	000 091 00 21	Shaft)for pump lever	1	
8	000 091 08 15	Pressure spring)	1	
9	000 091 16 15	Diaphragm spring	1	
10	000 091 00 36	Oil protective plate	1	
11	000 091 01 15	Spring (for oil protective plate)	1	
12	000 091 04 28	Diaphragm, complete	1	
13	-	Countersunk screw AM 3, 5x8 DIN 63-4 S (for valve plate)	3	
14	-	Toothed washer V 3, 7 DIN 6797	3	
15	000 091 04 29	Valve plate	1	

Fig. No.	No. of spare part	Denomination	Quantity	Remarks
16	000 091 01 80	Gasket (for valve plate)	1	
17	000 091 04 19	Valve spring (for intake and exhaust valve)	2	
18	000 091 00 29	Valve plate (for intake and exhaust valve)	2	
19	000 091 00 31	Valve seat (for intake valve)	1	
20	000 091 00 16	Spring cage (for exhaust valve)	1	
22	-	Lock washer B 5 DIN 127	6	) for upper part
23	-	Lens-hd. screw AM 5x15 DIN 85-4 S	6	) at lower part
24	000 091 08 39	Strainer with pressure spring	1	
25	000 091 06 80	Gasket (for cap)	1	
26	000 091 01 46	Cap (for upper part)	1	
27	-	Sealing ring A 6x12 DIN 7603 fiber	1	) for cap at upper part
28	-	Hex. -hd. screw M 6x12 DIN 931-8 G	1	)
29	-	Sealing ring A 8x12 DIN 7603 fiber (for screw plug at upper part)	1	

Fig. No.	No. of spare part	Denomination	Quantity	Remarks
30	000 091 03 56	Screw plug M 8 x 1 (for upper part)	1	
31	000 091 08 71	Water drain plug (at upper part)	1	
32	000 091 11 15	Pressure spring (for water drain plug)	1	
33	-	Sealing ring A 12x16 DIN 7603 hard fiber (for screw plug)	1	
34	-	Screw plug AM 12x1, 5 DIN 7604 (at upper part)	1	
35	-	Screwed nipple 6 DIN 7627	2	
36	-	Sealing ring A 12x16 DIN 7603 fiber	2	
36a	000 091 00 85	Bleeding filter (at fuel feed pump, lower part)	2	only valid for replacement delivery
37	181 091 00 80	Gasket	1	)
38	181 091 00 81	Insulating flange	1	) for fuel feed
39	181 091 00 80	Gasket	1	) pump at inter-
40	-	Lock washer B 8 DIN 137	2	) mediate flange
41	-	Hex.-hd. socket screw M 8x28 DIN 912-6 G	2	)

Fig. No.	No. of spare part	Denomination	Quantity	Remarks
42	180 091 01 80	Sealing flange (between intermediate flange and cylinder crankcase)	1	
43	180 090 01 44	Intermediate flange (at cylinder crankcase)	1	
44	180 091 01 50	Bushing	1	
45	180 091 00 91	Sleeve	1	
46	-	Washer 8,4 DIN 125	1	)for inter-)mediate flange
47	-	Hex. -hd. socket screw M 8x30 DIN 912-6 G	2	)at cylinder)crankcase
48	180 091 01 08	Plug (for fuel pump drive)	1	
		SUCTION NOISE DAMPER		
50	001 094 22 02	Damper filter with Pico element	1	
51	000 094 39 06	Cover with sealing ring	1	
52	000 094 36 80	Rubber sealing ring (between cover and filter housing)	1	
53	000 094 37 80	Rubber sealing ring (between cover and Pico element)	1	
54	000 094 01 55	Spring lock	4	
55	000 094 38 04	Pico element	1	

Fig. No.	No. of spare part	Denomination	Quantity	Remarks
56	000 094 37 80	Rubber sealing ring (in filter housing between Pico element)	1	
57	000 094 17 41	Support with rubber sleeve	1	
58	000 094 38 80	Rubber sleeve (for damper filter at carburettor)	1	
59	000 094 39 80	Rubber plate	6	) for support at damper filter
60	000 094 00 76	Washer	3	)
61	-	Castle nut M 6 DIN 935-5 S	3	)
62	-	Cotter pin 1, 5x15 DIN 94	3	)
63	-	Washer 8, 4 DIN 125	4	) for damper filter at suction tube
64	-	Hex. nut M 8 AGGN 14440-6 S	4	)

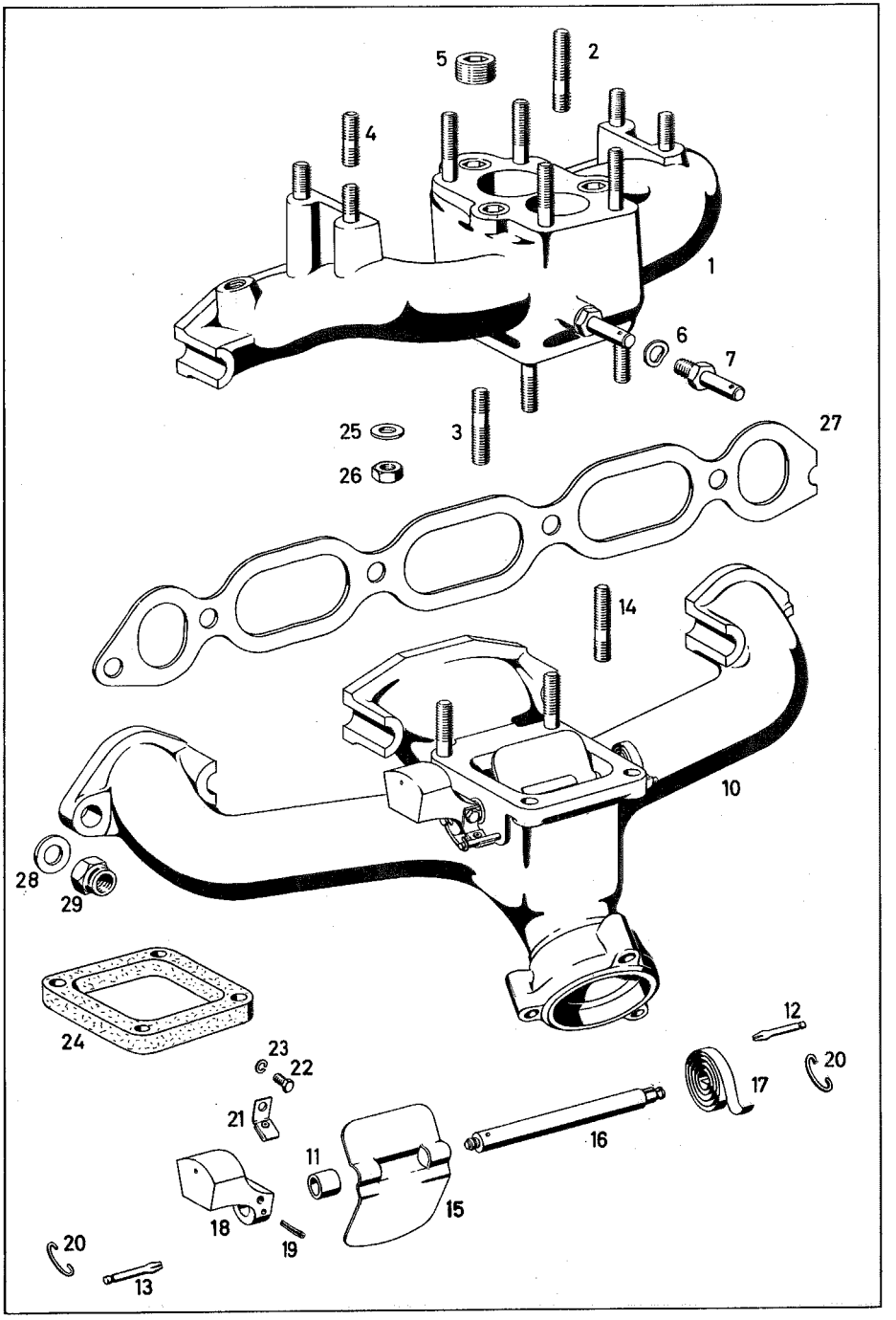
5
2
4
1
6
7
25
3
27
26
14
10
28
29
24
12
23
22
20
17
21
16
11
18
15
19
20
13

Fig.-No.	No. of spare part	Denomination	Quantity	Remarks
		SUCTION TUBE		
1	121 140 09 01	Suction tube with stud bolt	1	
2	-	Stud bolt M 8x35 DIN 939-5 S (for carburettor mounting)	4	
3	-	Stud bolt M 8x30 DIN 939-5 S (for exhaust manifold mounting)	2	
4	136 990 08 05	Stud bolt (for mounting air filter)	4	
5	-	Screw plug M 20x1, 5 DIN 906-4 D (for locking core holes)	3	
6	-	Lock washer B 8 DIN 137	1	for lever at suction tube
7	188 072 00 74	Pin	1	for lever at suction tube
		EXHAUST MANIFOLD		
10	121 140 02 11	Exhaust manifold with heating flap and tightening spring	1	
11	181 143 03 50	Bushing (for heating flap shaft)	2	
12	000 991 02 61	Grooved pin	1	
13	000 991 04 61	Grooved pin	1	
14	-	Stud bolt M 8x30 DIN 939-5 S (for suction tube mounting)	2	

Fig. No.	No. of spare part	Denomination	Quantity	Remarks
15	120 143 02 06	Heating flap (for exhaust manifold)	1	
16	186 143 01 05	Heating flap shaft	1	
17	153 143 00 10	Heating spiral	1	
18	186 143 02 07	Balancing weight (for heating flap)	1	
19	-	Dowel pin 3x20 DIN 1481	1	
20	181 993 02 25	Tightening spring	2	
21	186 140 00 27	Damping spring (for heating flap)	1	
22	-	Hex. -hd. screw M 5x8 DIN 933-8 G	1	)for damping)spring at)balancing
23	-	Lock washer B 5 DIN 127	1	)weight
24	121 142 02 80	Insulating flange	1	)
25	-	Washer 8, 4 DIN 125	4	) for exhaust) manifold at) suction tube
26	000 990 08 51	Hex. nut	4	)
27	121 142 00 80	Gasket	1	)
28	-	Washer 10, 5 DIN 125	6	) for suction tube) and exhaust) manifold at
29	-	Hex. nut M 10 AGGN 14441 (thread copper-plated)	6	) cylinder head))

10/024

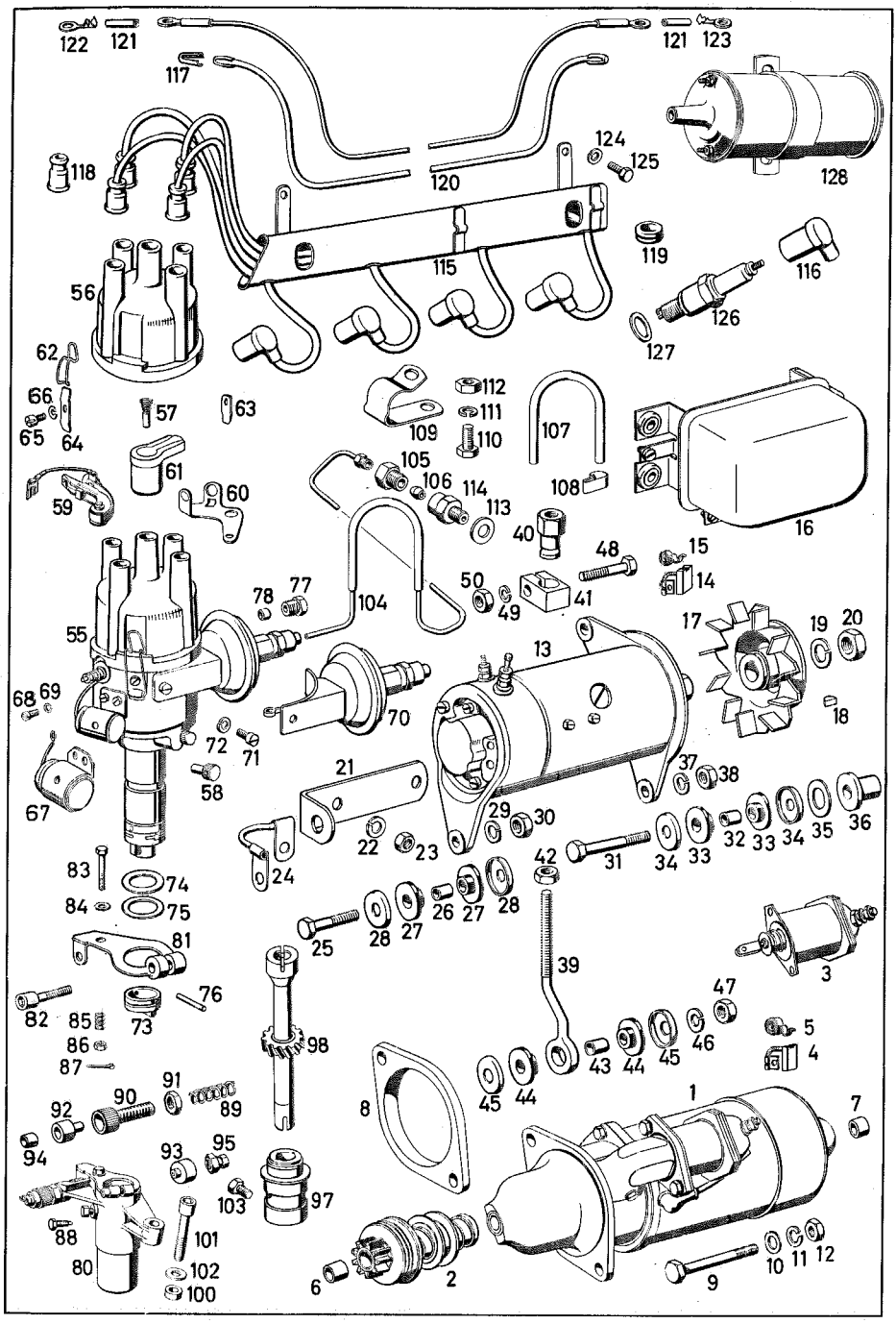
122
121
117
121
123
118
120
124
125
128
115
119
116
56
126
127
62
66
65
64
57
63
112
111
110
109
107
105
106
114
113
108
61
60
59
40
48
15
14
50
49
41
78
77
104
55
17
19
20
13
68
69
70
18
72
71
67
58
21
37
38
22
23
29
30
31
34
33
32
33
34
35
36
24
42
83
74
84
75
25
28
27
26
27
28
39
3
81
82
85
86
87
73
76
98
47
5
4
46
45
44
43
91
90
89
92
94
8
45
44
1
7
93
95
97
103
88
101
80
102
100
6
2
9
10
11
12

Fig. No.	No. of spare part	Denomination	Quantity	Remarks
		STARTER MOTOR		
1	000 151 77 01	Starter motor with push button operation	1	
2	000 151 20 13	Roller freewheel with pinion	1	
3	000 152 10 11	Solenoid switch, starter	1	
4	000 151 14 14	Set of carbon brushes (4 pieces)	1	
5	000 151 05 93	Pressure spring (for carbon brush)	4	
6	000 151 07 50	Bushing in drive bearing	1	
7	000 151 08 50	Bushing in collector bearing	1	
8	120 151 00 12	Intermediate flange (at starter motor)	1	)))
9	-	Hex. -hd. screw M 12x80 DIN 931-8 G	2	))for starter motor
10	-	Washer 13 DIN 433	2	)at clutch hous-) ing)
11	-	Lock washer B 12 DIN 127	2	)))
12	-	Hex. nut M 12 DIN 934-5 S	2	)))
		GENERATOR		
13	000 154 48 02	Generator	1	
14	000 154 27 14	Set of carbon brushes (2 pieces)	1	
15	000 154 06 93	Pressure spring (for carbon brush)	2	

Fig. No.	No. of spare part	Denomination	Quantity	Remarks
16	000 154 55 06	Regulating switch	1	see also group 54
17	180 155 07 15	Pulley)) optional	1	) for) generator
-	180 155 08 15	Pulley)	1	)
18	-	Woodruff key 3x5 DIN 6888) delivered together with generator	1	)))
19	-	Lock washer B 12 DIN 127)	1	) for pulley at) generator)
20	-	Hex. nut M 12x1, 5 DIN 936-5 S)	1	))
21	121 155 04 35	Support (for generator)	1	
22	-	Lock washer B 8 DIN 127	1	
23	-	Hex. nut M 8 DIN 934-5 S	1	
24	121 150 00 32	Ground cable (from generator at support)	1	
25	-	Hex.-hd. screw M 8x32 DIN 931-8 G	1	)))
26	180 991 06 40	Sleeve	1	)) for generator
27	120 155 00 81	Rubber plate	2	) at support)
28	120 155 00 82	Washer (generator suspension, rubber mounted)	2	))))
29	-	Lock washer B 8 DIN 127	1	)

Fig. No.	No. of spare part	Denomination	Quantity	Remarks
30	-	Hex. nut M 8 DIN 934-5 S (for generator at support)	1	
31	-	Hex. -hd. screw M 8x60 DIN 931-8 G	1	)
32	180 991 06 40	Sleeve	1	)
33	120 155 00 81	Rubber plate	2	) for generator at engine support, right
34	120 155 00 82	Washer (generator suspension, rubber mounted)	2	)
35	121 990 01 40	Washer	1	)
36	121 155 00 53	Spacer sleeve 25.5 mm long	1	)
37	-	Lock washer B 8 DIN 127	4	
38	-	Hex. nut M 8 DIN 934-5 S	1	
39	121 155 01 23	Tightening screw	1	) for generator adjustment
40	121 155 00 72	Tightening nut	1	)
41	121 155 00 28	Clamping piece	1	
42	-	Hex. nut M 8 DIN 934-5 S	1	
43	120 991 03 40	Sleeve	1	) for tightening screw with clamping piece at cylinder crankcase
44	120 155 00 81	Rubber plate	2	)
45	120 155 00 82	Washer	2	)
46	-	Lock washer B 8 DIN 127	1	)

Fig. No.	No. of spare part	Denomination	Quantity	Remarks
47	-	Hex. nut M 8 DIN 934-5 S (for tightening screw with clamping piece at cylinder crankcase)	1	
48	-	Hex. -hd. screw M 8x40 DIN 931-8 G	1	))for clamping
49	-	Lock washer B 8 DIN 127	1	)piece at)generator
50	-	Hex. nut M 8 DIN 934-5 S	1	)
		TIMING DISTRIBUTOR		
55	000 158 51 01	Timing distributor with coupling (with underpressure adjusting device)	1	
56	000 158 06 02	Distributor cap with carbon brush	1	
57	000 158 00 34	Carbon brush with spring	1	
58	000 158 04 89	Oiler in housing	1	
59	000 158 03 30	Breaker arm with contact and cable	1	
60	000 158 04 32	Contact carrier with contact	1	
61	000 158 06 31	Distributor rotor	1	
62	000 158 03 33	Locking wire (for distributor washer)	2	
63	000 158 03 40	Fixing shackle without nose	1	
64	000 158 04 40	Fixing shackle with nose	1	
65	-	Cylindr. screw AM 4x8 DIN 844 S	2	f. fixing shackle with locking wire at timing distributor

Fig. No.	No. of spare part	Denomination	Quantity	Remarks
66	-	Lock washer B 4 DIN 127 (for fixing shackle with locking wire at timing distributor)	2	
67	000 156 11 01	Condenser at housing	1	
68	-	Cylindr. screw AM 4x5 DIN 84-5 S	2	for condenser at timing distributor
69	-	Lock washer B 4 DIN 127	2	
70	000 158 04 18	Underpressure adjusting device	1	
71	-	Cylindr. screw AM 4x5 DIN 84-5 S	2	for underpressure adjusting device at timing distributor
72	-	Lock washer B 4 DIN 127	2	
73	000 158 03 09	Clutch (on shaft)	1	
74	000 158 01 76	Fiber washer (for clutch at timing distributor)	2	
75	000 158 00 52	Shim 0.1 mm thick	a.r.	for clutch at timing distributor
-	000 158 04 52	Shim 0.2 mm thick	a.r.	
76	000 158 04 74	Pin	1	
77	000 158 00 59	Threaded bushing	1	
78	000 158 02 60	Sealing ring	1	
80	121 150 00 07	Bearing, timing distributor	1	
81	180 150 01 24	Adjusting lever with angle	1	

Fig. No.	No. of spare part	Denomination	Quantity	Remarks
82	-	Hex. -hd. socket screw M 6x25 DIN 912-8 G	1	
83	-	Hex. -hd. screw M 5x30 S DIN 931-8 G	1	)))
84	-	Washer 5, 3 DIN 125	1	))
85	136 993 08 01	Helical spring	1	))
86	-	Hex. nut M 5 DIN 934-5 S	1	))
87	-	Cotter pin 1x12 DIN 94	1	) for adjusting) lever at
88	-	Hex. -hd. screw with pivot AM 6x12 DIN 561-5 S	1	) bearing)))
89	186 993 24 01	Pressure spring	1	))
90	186 158 00 70	Adjusting screw	1	)
91	-	Hex. nut M 10x1 DIN 936-5 S	1	
92	186 158 00 83	Rubber sleeve	1	
93	186 158 01 83	Damping rubber	1	
94	186 158 00 51	Sleeve	1	
95	198 150 00 29	Clamping chuck (for wire cable, timing distributor)	1	
97	180 150 01 07	Bearing with bushing (for timing distributor and oil pump housing)	1	

Fig. No.	No. of spare part	Denomination	Quantity	Remarks
98	180 158 04 12	Helical gear (for timing distributor drive)	1	
100	121 158 00 51	Intermediate ring	1	) for bearing, timing distributor at cylinder crankcase
101	-	Hex.-hd. socket screw M 8x45 DIN 912-8 G	1	)
102	-	Washer 8,4 DIN 125	1	)
103	-	Hex.-hd. screw M 8x10 DIN 933-8 G	1	
104	121 150 00 35	Underpressure line	1	
105	-	Tube screwing 4,2 DIN 71426	1	
106	-	Sealing cone 4,1 DIN 71426	1	
107	181 997 03 82	Rubber hose	1	
108	181 997 00 90	Hose strap	2	
109	180 995 04 01	Tube clamp (for fuel and underpressure line)	2	
110	-	Hex.-hd. screw M 5x10 DIN 933-8 G	2	) for tube clamp at underpressure line
111	-	Lock washer B 5 DIN 127	2	)
112	-	Hex. nut M 5 DIN 934-5 S	2	)
113	-	Sealing ring A 6x12 DIN 7603 A1	1	) for underpressure connection at carburettor
114	181 158 01 37	Connection piece	1	)

Fig. No.	No. of spare part	Denomination	Quantity	Remarks
		IGNITION CABLE		
115	121 150 01 19	Ignition cable set with protective tube	1	
116	-	Ignition cable plug C DIN 72566	4	
117	000 159 00 38	Cable sleeve	4	
118	000 159 00 85	Rain protective cap (for ignition cable)	4	
119	000 997 22 81	Grommet (for protective tube)	4	
120	180 150 06 18	Ignition cable (for ignition coil, distributor)	1	
-	000 159 00 38	Cable sleeve	2	
-	000 159 00 85	Rain protective cap (for ignition cable)	2	
121	159 546 00 37	Grommet	2	
122	-	Claw terminal 4x0, 8 N 261	1	
123	-	Claw terminal 5x0, 8 N 261	1	
124	-	Lock washer B 6 DIN 127	2	) for protective tube at cyl. head
125	-	Hex. -hd. screw M 6x10 DIN 933-8 G	2	)
		SPARK PLUG		
126	000 159 17 03	Spark plug)) optional	4	
-	000 159 16 03	Spark plug)	4	

Fig. No.	No. of spare part	Denomination	Quantity	Remarks
127	-	Sealing ring C 14x20 DIN 7603 St. Asb. (for spark plug at cylinder head) (delivered together with spark plug)	4	
		IGNITION COIL		
128	000 158 00 03	Ignition coil at dashboard	1	see also group54

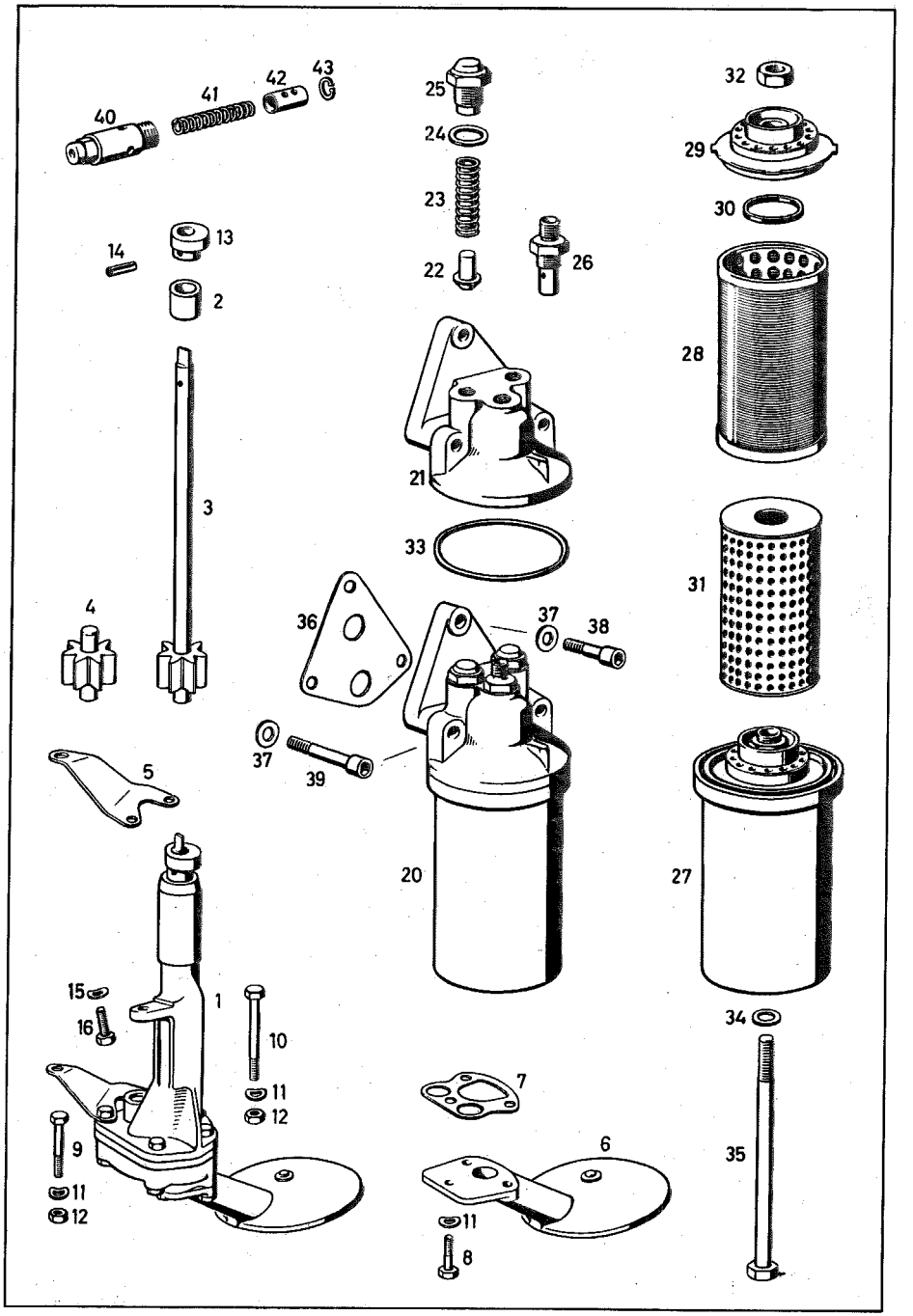
40
41
42
43
25
24
23
22
26
32
29
30
28
14
13
2
3
4
21
33
31
36
37
38
37
39
5
20
27
15
16
1
10
11
12
9
11
12
7
6
11
8
34
35

Fig. No.	No. of spare part	Denomination	Quantity	Remarks
		OIL PUMP		
1	121 180 09 01	Oil pump, complete	1	
2	180 181 01 50	Bearing bushing, top	1	
3	121 180 03 07	Drive shaft with gear	1	
4	121 180 01 08	Oil pump shaft with gear	1	
5	121 181 00 95	Bracket	1	
6	121 180 06 52	Suction basket	1	
7	121 186 00 80	Gasket	1	) for lower part and suction basket at upper part
8	-	Hex.-hd. screw M 6x22 DIN 931-8 G	1	
9	-	Hex.-hd. screw M 6x35 DIN 931-8 G	2	
10	-	Hex.-hd. screw M 6x55 DIN 931-8 G	2	
11	-	Lock washer B 6 DIN 137	5	
12	-	Hex. nut M 6 DIN 934-5 S	4	
13	180 091 01 12	Cam (on oil pump drive shaft for fuel feed pump)	1	
14	-	Dowel pin 4x18 DIN 1481 (for cam)	1	
15	-	Lock washer B 8 DIN 137 (for oil pump at cylinder crankcase)	1	

10/024

Fig. No.	No. of spare part	Denomination	Quantity	Remarks
16	-	Hex.-hd. screw M 8x18 DIN 933-8 G (for oil pump at cyl. crankcase)	1	
		OIL FILTER		
-	000 184 58 01	Oil filter, complete)) optional	1	
20	121 180 01 10	Oil filter, complete)	1	
21	121 184 01 08	Oil filter housing, upper part	1	
22	181 184 00 30	Valve cone	2	
23	181 993 06 01	Spring	2	
24	-	Sealing ring D 18x22 DIN 7603 A1	2	
25	181 184 00 56	Screw plug	2	
26	181 184 01 17	Screwed nipple	1	
27	000 184 35 01	Lube oil plate-type filter with Micronic element	1	
28	000 184 05 12	Coil	1	
29	000 184 00 15	Discharge ring with sealing ring	1	
30	000 184 06 80	Sealing ring	1	
31	000 184 22 25	Filter element (Micronic element)	1	
32	000 990 49 51	Hex. nut M 14 x 1,5	1	

Fig. No.	No. of spare part	Denomination	Quantity	Remarks
33	181 997 03 41	Sealing ring (for oil filter housing, upper and lower part)	1	
34	-	Sealing ring D 10x16 DIN 7603 A1	1	for laminated lube oil filter at oil filter housing
35	-	Hex.-hd. screw M 10x1x160 DIN 960-8 G	1	
36	121 184 00 80	Shim	1	
37	-	Washer 8,4 DIN 433	3	for oil filter housing at cyl. crankcase
38	-	Hex.-hd. socket screw M 8x30 DIN 912-8 G	1	
39	-	Hex.-hd. socket screw M 8x60 DIN 912-8 G	2	
		OIL PRESSURE RELIEF VALVE		
40	121 180 01 15	Oil pressure relief valve, 6 atü	1	
41	186 993 17 01	Spring	1	
42	159 181 00 42	Plunger	1	
43	-	Circlip 12x1 DIN 472	1	

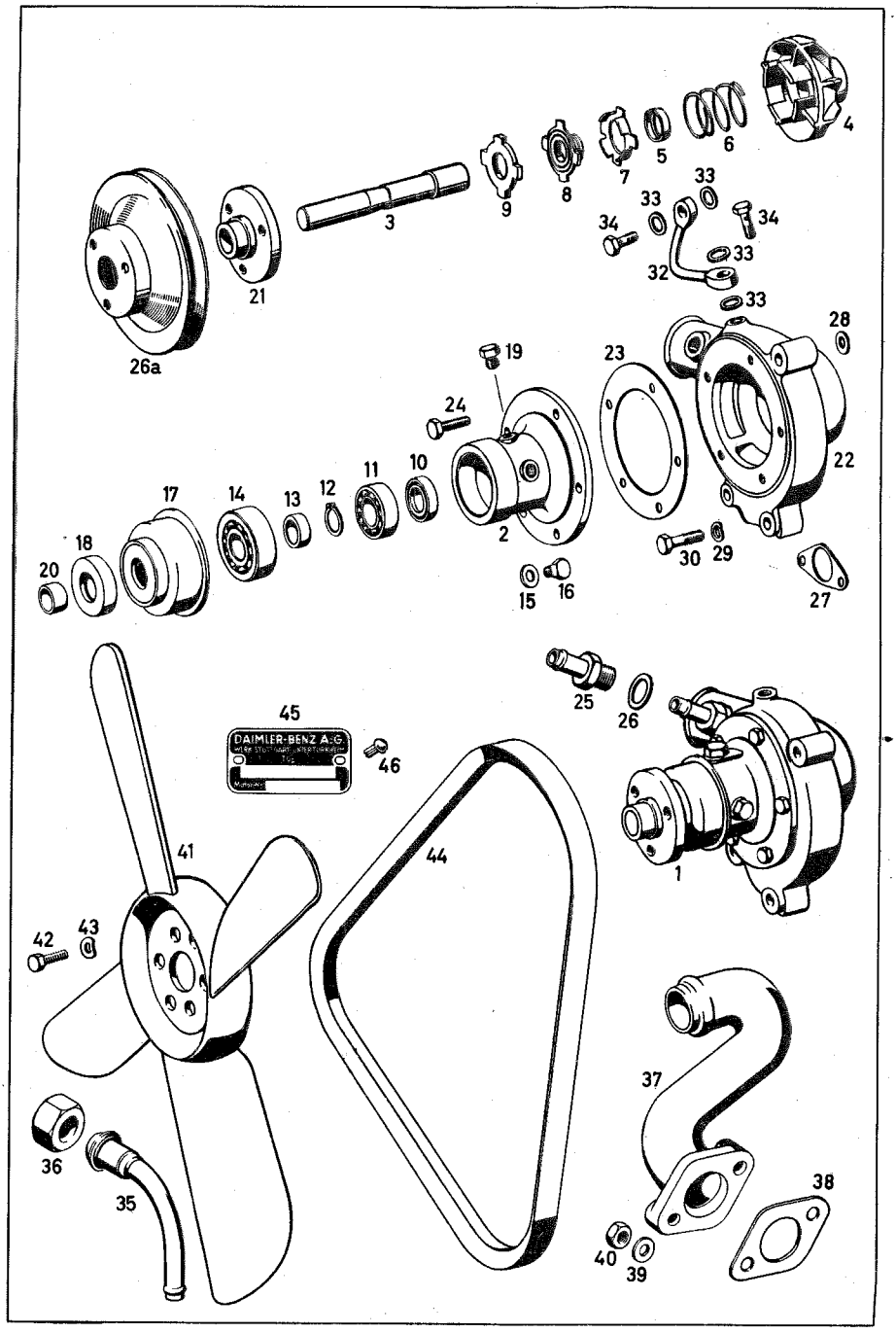
4
6
5
7
8
9
3
21
26a
33
34
32
28
23
22
19
24
2
10
11
12
13
14
17
18
20
15
16
30
29
27
45
DAIMLER-BENZ A.G.
46
41
42
43
44
25
26
1
36
35
37
38
40
39

Fig. No.	No. of spare part	Denomination	Quantity	Remarks
		COOLING WATER PUMP		
1	180 200 10 01	Water pump, complete	1	
2	180 201 04 10	Bearing housing	1	
3	180 201 04 05	Water pump shaft	1	
4	180 201 02 07	Impeller	1	
5	312 201 02 59	Cover (for sealing ring holder)	1	
6	180 993 11 01	Pressure spring	1	
7	312 201 03 58	Slip ring cage	1	
8	312 201 01 18	Sealing ring	1	
9	312 201 01 19	Slip ring	1	
10	136 997 00 47	Sealing ring	1	
11	-	Grooved roller bearing 6202 DIN 625	1	
12	-	Circlip 15x1 DIN 471	1	
13	180 201 01 51	Spacer sleeve	1	
14	-	Grooved roller bearing 6302 DIN 625	1	
15	-	Sealing ring A 8x12 DIN 7603 A1	1	)for locking
16	-	Screw plug AM 8x1 DIN 7604	1	)bore for oil)level
17	180 200 00 60	Sealing ring holder	1	

10/024

Fig. No.	No. of spare part	Denomination	Quantity	Remarks
18	180 997 01 47	Sealing ring	1	
19	186 997 02 30	Screw plug (for ventilation to bearing housing)	1	
20	180 201 00 18	Intermediate ring	1	
21	180 202 00 14	Hub	1	
22	180 201 03 01	Water pump housing	1	
23	180 201 00 80	Gasket	1	) for water pump
24	-	Hex.-hd. screw M 6x15 DIN 933-8 G (galvanised, glossy)	5	) housing at) bearing housing
25	180 203 01 08	Screwed fitting	1	)
26	-	Sealing ring A 16x20 DIN 7603 A1	1	) for water pump) housing
26a	121 205 01 10	Pulley (for fan, water pump)	1	
27	180 203 03 80	Gasket	1	)
28	180 203 04 80	Sealing ring	1	) for water pump
29	-	Lock washer B 8 DIN 137	3	) at cylinder) crankcase
30	-	Hex.-hd. screw M 8x35 DIN 931-8 G	3	)
32	121 200 01 58	Bleeder line (for water pump)	1	

Fig. No.	No. of spare part	Denomination	Quantity	Remarks
33	-	Sealing ring A 8x12 DIN 7603 Al	4	)for bleeder line)at water pump
34	-	Hollow screw A 2/3 DIN 7623	2	)and cyl. head
35	180 200 00 19	Tube elbow (for heating connection)	1	
36	-	Box nut 16 M 26x1, 5 DIN 7606 (for tube elbow at cylinder head)	1	
		COOLING WATER DISCHARGE NIPPLE		
37	180 203 06 31	Cooling water discharge nipple	1	
38	180 203 05 80	Gasket	1	) for cooling) water discharge) nipple at) cylinder head)
39	-	Washer 8, 4 DIN 433	2	
40	000 990 08 51	Hex. nut M 8	2	
		FAN AND V-BELT		
41	180 205 02 06	Fan	1	
42	-	Hex.-hd. screw M 8x18 DIN 933-8 G	3	)for fan and) pulley at) water pump
43	-	Lock washer B 8 DIN 137	3	)
44	-	V-belt, narrow 9, 5x850 mm long N 275	1	
		ACCESSORIES		
45	-	Engine plate N 202 MU 5	1	f. engine plate
46	-	Button-hd. grooved nail 3 x 6 DIN 1476	2	at cyl. crank-case

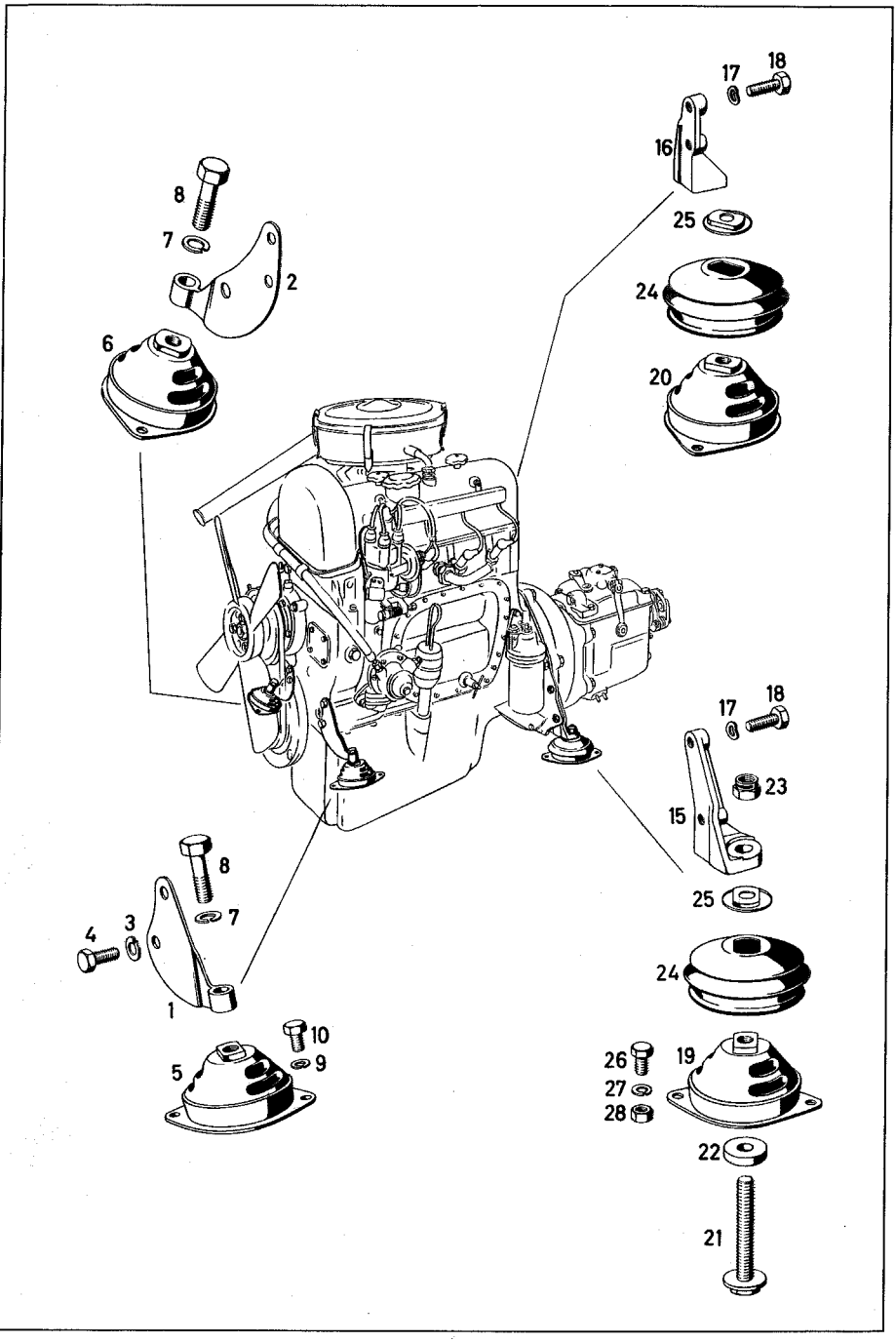
17
18
16
8
7
2
25
24
6
20
17
18
15
23
8
7
4
3
1
25
24
10
9
5
26
19
27
28
22
21

Fig. No.	No. of spare part	Denomination	Quantity	Remarks
		ENGINE SUSPENSION, FRONT		
1	121 220 08 16	Engine support, front, left	1	
2	121 220 09 16	Engine support, front, right	1	
3	-	Lock washer B 8 DIN 127	3	)for engine
4	-	Hex.-hd. screw M 8x18 DIN 933-8 G	3	)support at)cylinder)crankcase
5	120 223 04 12	Rubber mounting, left	1	)
6	120 223 05 12	Rubber mounting, right	1	)for engine suspension, front)
7	-	Lock washer B 12 DIN 127	2	)
8	-	Hex.-hd. screw M 12x40 DIN 931-8 G	2	)for rubber)mounting at)engine support)
9	-	Lock washer B 8 DIN 127	4	)for rubber
10	-	Hex.-hd. screw M 8x15 DIN 933-8 G	4	)mounting at)front axle)support
		ENGINE SUSPENSION, REAR		
15	121 223 18 04	Engine support, rear, left	1	
16	121 223 19 04	Engine support, rear, right	1	
17	-	Lock washer B 8 DIN 13	4	
18	-	Hex.-hd. screw M 8 x 25 DIN 933-8 G	4	
19	120 223 04 12	Rubber mounting, left (for engine suspension, rear)	1	

10/024

Fig. No.	No. of spare part	Denomination	Quantity	Remarks
20	120 223 05 12	Rubber mounting, right (for engine suspension, rear)	1	
21	121 220 00 71	Screw (for rear engine suspension)	2	))for rubber)mounting
22	121 987 00 39	Rubber buffer	2	)at engine)support
23	-	Hex. nut M 12 AGGN 14441	2	)
24	121 224 00 82	Bellows) for engine	2	
25	121 224 00 84	Sheet metal plate) mounting	2	
26	-	Hex. -hd. screw M 8x15 DIN 933-8 G	4	))for rear rubber) mounting at
27	-	Lock washer B 8 DIN 127	4	) front axle) support
28	-	Hex. nut M 8 DIN 934-5 S	4	)

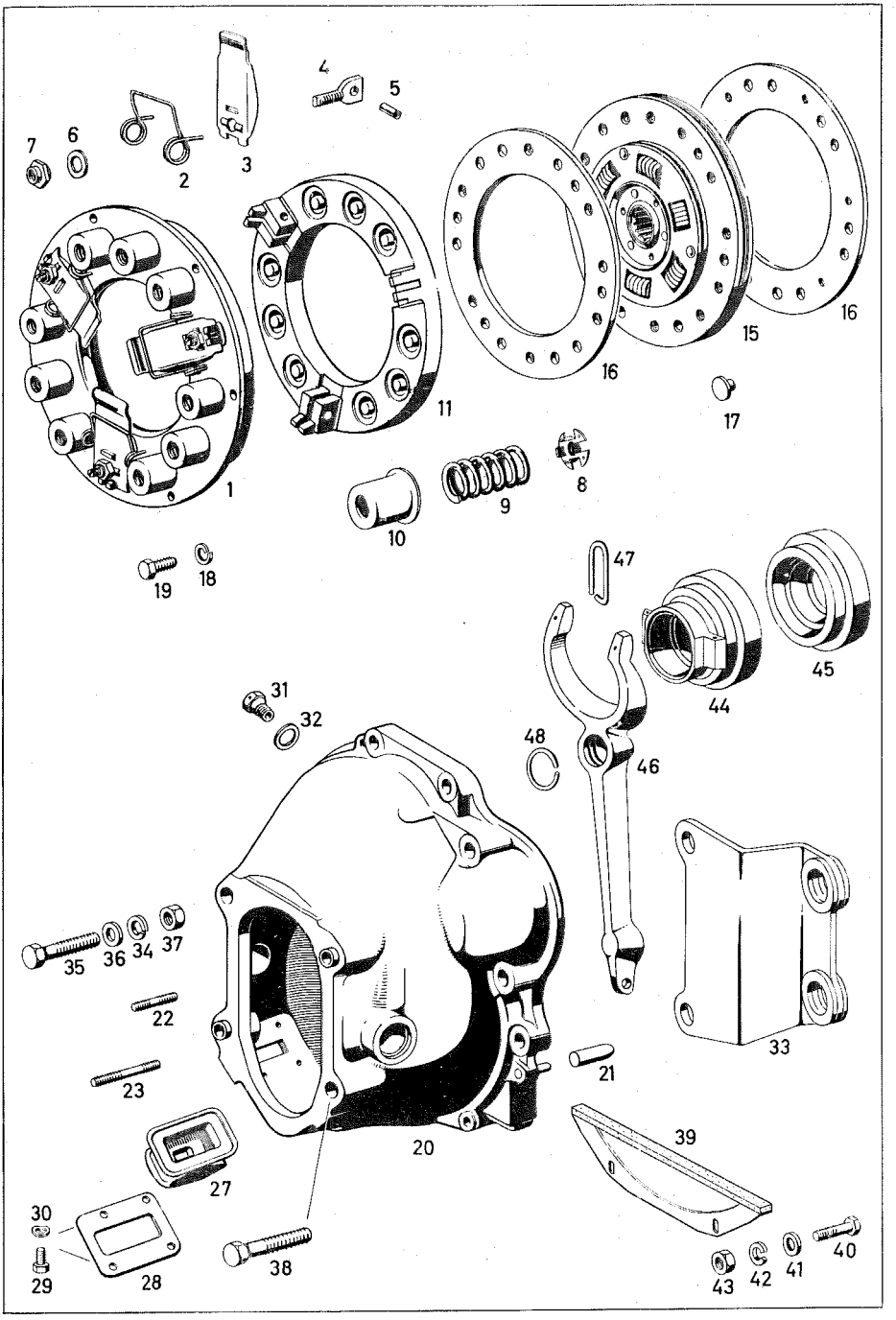
1
2
3
4
5
6
7
8
9
10
11
15
16
16
17
18
19
20
21
22
23
27
28
29
30
31
32
33
34
35
36
37
38
39
40
41
42
43
44
45
46
47
48

Fig. No.	No. of spare part	Denomination	Quantity	Remarks
		CLUTCH		
1	121 250 02 04	Clutch pressure plate, complete without follower disc	1	
2	000 252 04 27	Spring	3	
3	000 252 09 13	Lever	3	
4	000 252 03 74	Swivel pin	3	
5	-	Dowel pin 6x18 DIN 1481	3	
6	000 252 00 51	Ring (for adjusting nut)	3	
7	000 252 04 72	Adiusting nut	3	
8	136 252 00 24	Ring	9	
9	000 252 00 20	Spring	9	
10	000 252 00 35	Grommet	9	
11	000 252 11 06	Pressure plate	1	
15	121 250 03 03	Clutch follower disc	1	
16	187 252 04 10	Clutch lining	2	
17	136 990 00 95	Hollow rivet (for clutch lining)	12	
18	-	Lock washer B 8 DIN 127	6	))for pressure
19	-	Hex.-hd. screw M 8x20 DIN 933-8 G	6	)plate at fly-)wheel

Fig. No.	No. of spare part	Denomination	Quantity	Remarks
20	121 250 00 05	Clutch housing	1	
21	186 991 07 01	Cylindr. pin	1	
22	-	Stud bolt M 7x22 DIN 835-5 S	1	))for bracket -
23	121 990 00 05	Stud bolt	1	)spring suspen-)sion
27	120 254 00 97	Sleeve at clutch housing	1	
28	120 254 00 58	Gasket holder	1	))for sleeve at
29	-	Hex.-hd. screw M 6x12 DIN 933-8 G	4	)clutch housing))
30	-	Lock washer B 6 DIN 137	4	)
31	120 251 00 71	Vent screw	1	
32	-	Sealing ring A 12x16 DIN 7603 A1	1	
33	121 490 01 44	Mounting plate (for exhaust muffler support)	1	
34	-	Lock washer B 12 DIN 127	4	))
35	-	Hex.-hd. screw M 12x50 DIN 931-8 G	2	))) for clutch
36	-	Washer 13 DIN 125	4	) housing at) transmission
37	-	Hex. nut M 12 DIN 934-5 S	4	) housing))
38	-	Hex.-hd. screw M 12x55 DIN 931-8 G	2	))

Fig. No.	No. of spare part	Denomination	Quantity	Remarks
39	180 250 00 56	Cover plate for clutch housing	1	
40	-	Hex. -hd. screw M 6x25 DIN 931-8 G	2	)))for cover plate
41	-	Washer 6, 4 DIN 125	2	) at clutch) housing
42	-	Lock washer B 6 DIN 127	2	))
43	-	Hex. nut M 6 DIN 934-5 S	2	)
44	121 250 01 15	Clutch throw-out bearing with throw-out unit	1	
45	121 254 00 10	Throw-out bearing	1	
46	180 293 01 11	Throw-out fork	1	
47	120 993 01 25	Spring clip (for throw-out fork at throw-out unit)	2	
48	-	Snap ring R 16 DIN 71805 (for throw-out fork at ball pin)	1	

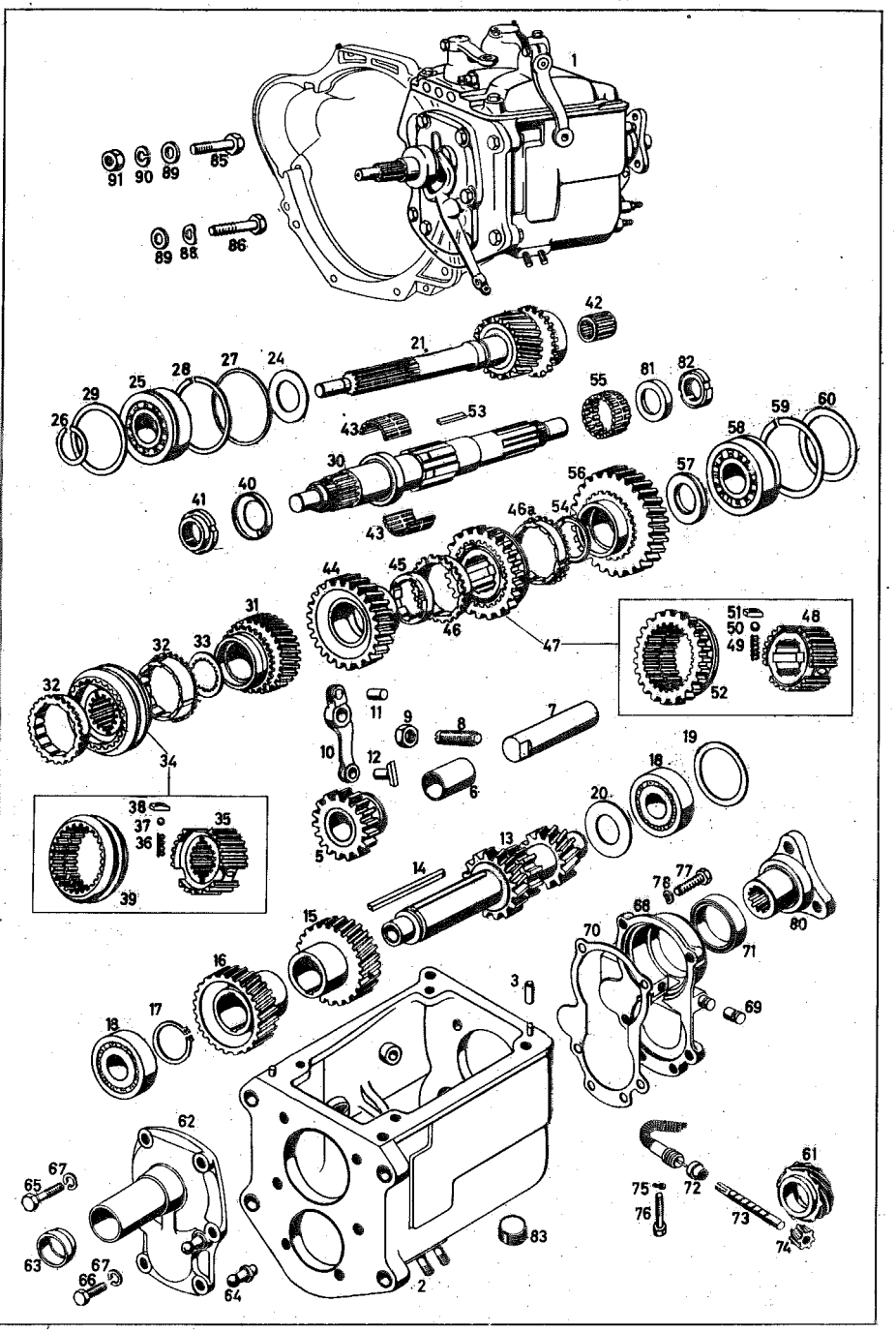
1
2
3
5
6
7
8
9
10
11
12
13
14
15
16
17
18
19
20
21
24
25
26
27
28
29
30
31
32
33
34
35
36
37
38
39
40
41
42
43
44
45
46
46a
47
48
49
50
51
52
53
54
55
56
57
58
59
60
61
62
63
64
65
66
67
68
69
70
71
72
73
74
75
76
77
78
80
81
82
83
85
86
88
89
90
91

Fig. No.	No. of spare part	Denomination	Quantity	Remarks
		TRANSMISSION		
1	121 260 25 01	Transmission, fully synchronized without clutch housing	1	
		TRANSMISSION CASE		
2	186 260 00 11	Transmission case	1	
3	-	Cylindr. pin 6 h8 x 16 DIN 7 rounded	2	
		TRANSMISSION GEARS		
5	120 260 03 25	Reverse drive gear	1	
6	120 263 03 50	Bushing	1	
7	186 263 00 30	Reverse drive shaft	1	
8	-	Threaded pin M 10x45 DIN 417-5 S with hardened pivot	1	for reverse drive shaft at transmission case
9	-	Hex. nut M 10 DIN 934-5 S	1	
10	136 260 00 37	Intermediate lever	1	
11	-	Dowel pin 8x14 N 37 b	1	
12	136 263 00 23	Shifting claw	1	
13	120 260 01 24	Countershaft	1	
14	186 991 03 68	Woodruff key	1	
15	120 263 00 13	Countershaft gear 27 teeth (for third gear)	1	

Fig. No.	No. of spare part	Denomination	Quantity	Remarks
16	120 263 06 10	Countershaft gear 32 teeth (for fourth gear)	1	
17	-	Circlip 35x2 DIN 471 reinforced	1	
18	-	Annular grooved bearing 6305 C 3 DIN 625 (on countershaft)	2	
19	120 263 15 52	Shim 0.25 mm thick))	a.r.	
-	120 263 16 52	Shim 0.50 mm thick)) optional	a.r.	
-	120 263 08 52	Shim 1.00 mm thick))	a.r.	
-	120 263 14 52	Shim 0.10 mm thick)	a.r.	
20	186 990 18 40	Protective washer (at annular grooved bearing, rear)	1	
21	121 260 00 20	Drive shaft with synchronising cone	1	
24	186 262 00 66	Oil slinger plate (on drive shaft)	1	
25	-	Annular grooved bearing with cover plate 6306 ZN DIN 625	1	
26	136 262 00 94	Snap ring	1	
27	186 262 04 51	Spacer ring (for bearing, drive shaft)	1	

Fig. No.	No. of spare part	Denomination	Quantity	Remarks
28	136 994 09 35	Snap ring 2.00 mm thick)	1	)
-	136 994 06 35	Snap ring 1.90 mm thick) optional	1	)
-	136 994 07 35	Snap ring 2.05 mm thick)	1	) for drive shaft at transmission case
29	136 262 06 52	Shim 0.1 mm thick)	a.r.	)
-	136 262 07 52	Shim 0.2 mm thick) optional	a.r.	)
-	136 262 08 52	Shim 0.3 mm thick)	a.r.	)
		MAIN SHAFT		
30	186 262 12 05	Main shaft	1	
31	120 260 09 44	Helical gear with bushing and synchronising cone (for 3rd gear)	1	
32	186 262 07 36	Synchronising ring (for 3rd and 4th gear)	2	
33	120 262 23 62	Guard plate (for 3rd gear)	1	
34	120 260 04 45	Synchronising body (for 3rd and 4th gear)	1	
35	120 262 08 35	Synchronising body	1	
36	120 993 14 01	Pressure spring	3	
37	-	Steel ball 6.5 mm III DIN 5401	3	
38	194 262 00 40	Follower	3	

Fig. No.	No. of spare part	Denomination	Quantity	Remarks
39	120 262 09 23	Sliding sleeve	1	
40	120 994 01 15	Locking plate	1	) for main shaft, front
41	120 262 03 26	Grooved nut	1	)
42	000 981 08 12	Roller cage)) optional	1	
-	000 981 09 12	Roller cage)	1	
43	120 981 03 12	Roller cage, split	1	
44	120 262 07 12	Helical gear 24 teeth (for 2nd gear)	1	
45	120 262 16 62	Butting ring 7.90 mm thick	1	)
-	120 262 17 62	Butting ring 7.95 mm thick	1	)
-	120 262 18 62	Butting ring 8.00 mm thick	1	) optional
-	120 262 19 62	Butting ring 8.05 mm thick	1	)
-	120 262 20 62	Butting ring 8.10 mm thick	1	)
46	186 262 07 36	Synchronising ring (for 2nd gear)	1	
46a	186 262 14 36	Synchronising ring (for 1st gear)	1	
47	120 260 02 45	Synchronising ring (for 1st and 2nd gear)	1	
48	120 262 05 35	Synchronising body	1	
49	120 993 14 01	Pressure spring	3	

10/024

Fig. No.	No. of spare part	Denomination	Quantity	Remarks
50	-	Steel ball 6.5 mm III DIN 5401	3	
51	194 262 00 40	Follower	3	
52	120 262 08 23	Sliding sleeve	1	
53	120 262 00 81	Key (for main shaft)	1	
54	120 262 11 62	Guard plate 4.40 mm thick	1	)
-	120 262 12 62	Guard plate 4.45 mm thick	1	)
-	120 262 13 62	Guard plate 4.50 mm thick	1	) optional
-	120 262 14 62	Guard plate 4.55 mm thick	1	)
-	120 262 15 62	Guard plate 4.60 mm thick	1	)
55	120 981 02 12	Roller cage (for 1st gear)	1	
56	120 262 07 11	Helical gear 28 teeth (for 1st gear)	1	
57	186 262 01 62	Guard plate 3.80 mm thick	a.r.	)
-	186 262 02 62	Guard plate 3.90 mm thick	a.r.	)
-	186 262 03 62	Guard plate 4.00 mm thick	a.r.	)
-	186 262 04 62	Guard plate 4.10 mm thick	a.r.	) optional
-	186 262 05 62	Guard plate 4.20 mm thick	a.r.	)
-	186 262 06 62	Guard plate 4.30 mm thick	a.r.	)
-	186 262 07 62	Guard plate 4.40 mm thick	a.r.	)
-	186 262 08 62	Guard plate 4.50 mm thick	a.r.	)

Fig. No.	No. of spare part	Denomination	Quantity	Remarks
58	136 981 02 25	Annular grooved bearing	1	
59	-	Snap ring Sp 72 A DIN 5417	1	
60	136 262 04 52	Shim 0.10 mm thick)	a.r.	) on main shaft
-	136 262 05 52	Shim 0.20 mm thick) optional	a.r.	) for rear transmission case cover
-	136 262 09 52	Shim 0.30 mm thick)	a.r.	)
61	121 264 00 30	Helical gear (for tachometer drive)	1	
62	121 260 00 21	Transmission case cover, front	1	
63	186 261 00 60	Sealing ring	1	
64	120 991 03 15	Ball pin	1	
65	-	Hex.-hd. screw M 8x25 DIN 931-8 G	2	)
66	-	Hex.-hd. screw M 8x22 DIN 933-8 G	4	) for transmission case cover, front at transmission case
67	-	Lock washer B 8 DIN 127	6	)
68	120 260 20 16	Transmission case cover, rear	1	
69	153 264 00 55	Plug	1	
70	186 261 04 79	Gasket (for transmission case cover, rear)	1	
71	000 997 17 46	Sealing ring (for main shaft)	1	

Fig. No.	No. of spare part	Denomination	Quantity	Remarks
72	120 261 00 80	Sealing ring (for tachometer drive shaft)	1	
73	120 264 04 32	Shaft	1	for tachometer drive
74	121 264 00 31	Small drive gear	1	
75	-	Lock washer B 6 DIN 137	1	for flexible shaft at transmission case cover, rear
76	-	Hex.-hd. screw M 6x30 DIN 931-8 G	1	
77	-	Hex.-hd. screw M 8x22 DIN 933-8 G	6	for transmission case cover, rear at transmission case
78	-	Lock washer B 8 DIN 137	6	
80	186 262 08 45	Three-way flange on main shaft	1	
81	186 262 01 73	Lock	1	for three-way flange at main shaft
82	186 262 02 26	Grooved nut M 24 x 1,5	1	
83	-	Screw plug M 24x1,5 DIN 906-4 S (for filling and draining oil at transmission)	2	
85	-	Hex.-hd. screw M 10x40 DIN 931-8 G	5	for transmission at cylinder crankcase
88	-	Lock washer B 10 DIN 137	4	
89	-	Washer 10,5 DIN 125	1	
90	-	Lock washer B 10 DIN 127	1	
91	-	Hex. nut M 10 DIN 934-5 S	1	

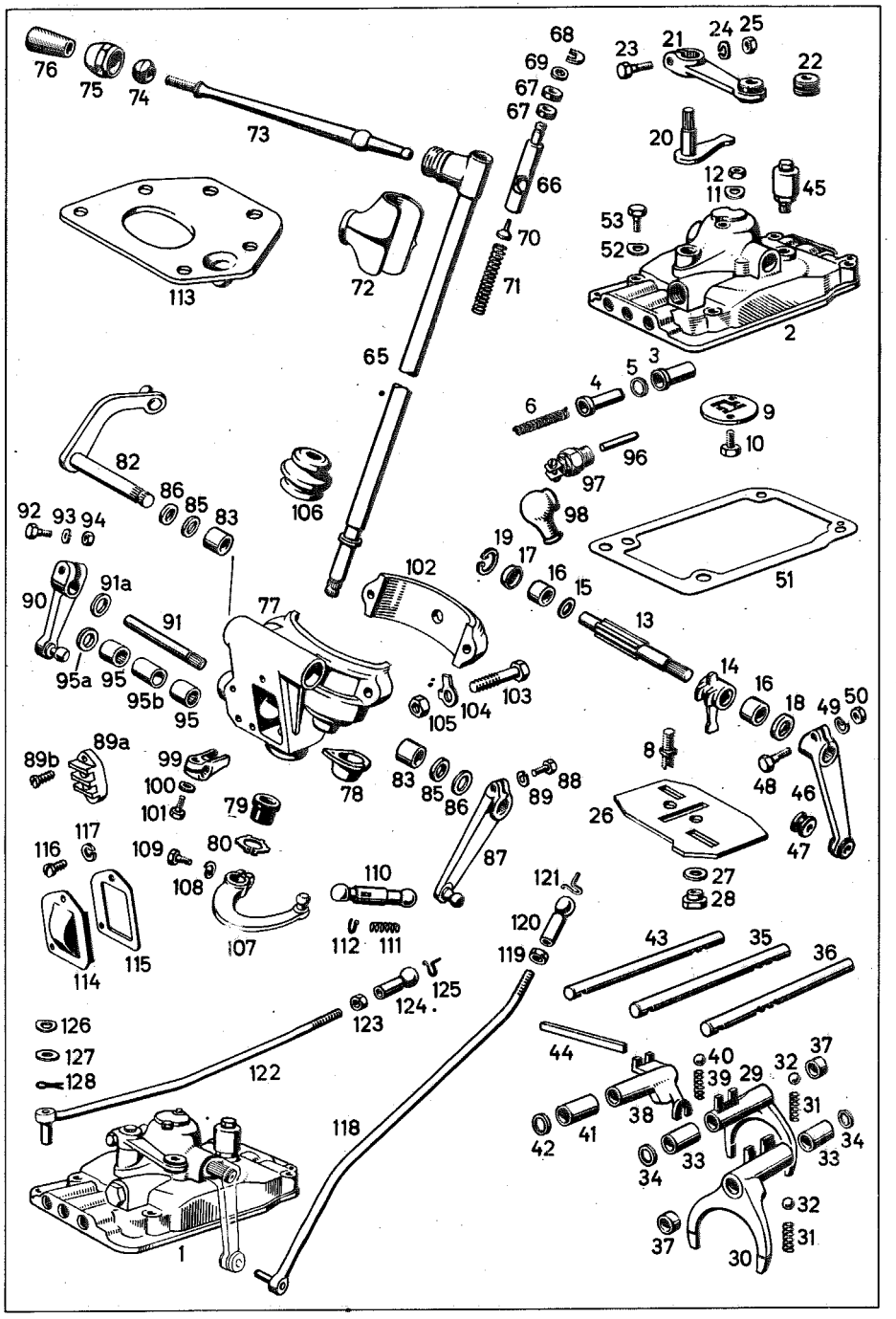
76
75
74
73
68
69
67
67
66
70
71
72
113
65
23
21
24
25
22
20
12
11
45
53
52
2
5
3
4
6
9
10
96
97
98
82
86
85
83
92
93
94
106
19
17
16
15
51
102
77
13
14
16
18
49
50
90
91a
91
95a
95
95b
95
105
104
103
89b
89a
99
100
101
79
78
83
85
86
89
88
8
48
46
47
26
27
28
87
116
117
109
80
108
107
110
112
111
121
120
119
114
115
43
35
36
125
124
123
126
127
128
122
44
40
39
29
32
37
38
31
42
41
34
33
118
1
37
30
32
31

Fig. No.	No. of spare part	Denomination	Quantity	Remarks
		SHIFTING CONTROLS, TRANSMISSION		
1	186 260 08 14	Transmission case cover, top with selector finger lever (without shifting finger lever) Exchange mounted plug in transmission case cover against reverse drive light switch and pressure pin.	1	
2	186 260 07 14	Transmission case cover	1	
3	153 992 00 05	Bushing	1	
4	136 265 00 48	Bar	1	)
5	186 261 00 52	Shim 0.2 mm thick)) optional	a.r.	) stop for reverse) drive gear)
-	186 261 01 52	Shim 0.5 mm thick)	a.r.	)
6	180 993 26 01	Pressure spring	1	
8	136 265 02 47	Guide pin	2	
9	183 265 00 46	Locking plate	1	
10	-	Hex.-hd. screw M 6 x 18 DIN 933-8 G	2	)) for locking) plate at trans-
11	-	Lock washer B 6 DIN 137	2	) mission case) cover, top
12	-	Hex. nut M 6 DIN 934-5 S	2	)
13	136 268 00 07	Shifting shaft	1	

Fig. No.	No. of spare part	Denomination	Quantity	Remarks
14	183 268 01 33	Shifting finger)) optional	1	) on shifting) shaft
-	186 268 00 33	Shifting finger)	1	)
15	183 268 00 52	Washer	1	
16	000 981 01 10	Needle bearing HK 12x19/16	2	
17	186 997 01 20	Cover	1	
18	-	Radial sealing ring A 12x22x7 DIN 6503	1	)) for shifing) shaft
19	-	Circlip 22x1 DIN 472	1	)
20	186 260 02 79	Selector finger	1	
21	186 260 00 37	Selector lever	1	
22	186 260 01 50	Rubber ring	1	
23	-	Hex. -hd. screw M 6x25 DIN 931-8 G	1	) for clamping) lever for) selector finger
24	-	Lock washer B 6 DIN 127	1	))
25	-	Hex. nut M 6 DIN 934-5 S	1	)
26	186 260 00 28	Guide plate	1	
27	136 990 82 40	Washer	2	) for guide plate) at transmission) case cover
28	136 265 02 72	Nut M 8	2	
29	186 265 00 01	Shift fork (for 1st and 2nd gear)	1	
30	186 265 00 02	Shift fork (for 3rd and 4th gear)	1	

Fig. No.	No. of spare part	Denomination	Quantity	Remarks
31	186 993 13 01	Pressure spring	2	
32	-	Steel ball 8 mm III DIN 5401	2	
33	136 265 00 53	Spacer tube	2	
34	136 265 00 51	Spacer ring 0.3 mm thick	a.r.	)
-	136 265 01 51	Spacer ring 0.5 mm thick	a.r.	)optional
-	136 265 02 51	Spacer ring 1.0 mm thick	a.r.	)
35	136 265 04 04	Shift rail (for 1st and 2nd gear)	1	
36	136 265 05 04	Shift rail (for 3rd and 4th gear)	1	
37	184 265 00 53	Spacer tube	2	
38	136 265 00 07	Rail end (for reverse gear)	1	
39	136 993 31 01	Pressure spring	1	
40	-	Steel ball 8 mm III DIN 5401	1	)
41	136 265 01 53	Spacer tube	1	)for rail end
42	136 265 00 51	Spacer ring 0.3 mm thick)	a.r.	)for reverse gear
-	136 265 01 51	Spacer ring 0.5 mm thick) optional	a.r.	)
-	136 265 02 51	Spacer ring 1.0 mm thick)	a.r.	)
43	136 265 02 04	Shift rail (for reverse gear)	1	

Fig. No.	No. of spare part	Denomination	Quantity	Remarks
44	136 265 00 81	Key (for shift rail mounting)	1	
45	136 350 01 90	Fan (at transmission case cover, top)	1	
46	120 260 21 37	Lever (for shifting shaft)	1	
47	186 260 01 50	Rubber ring	1	
48	-	Hex. -hd. screw M 6x25 DIN 931-8 G	1	) for lever at shifting shaft
49	-	Lock washer B 6 DIN 127	1	)
50	-	Hex. nut M 6 DIN 934-5 S	1	)
51	186 261 01 79	Gasket (for transmission case cover, top)	1	
52	-	Lock washer B 8 DIN 137	4	) for transmission case cover, top
53	-	Hex. -hd. screw M 8x30 DIN 931-8 G	4	) at transmission case
		SHIFTING, STEERING COLUMN		
65	180 260 01 82	Shifting tube	1	
66	180 268 01 39	Guide pin	1	
67	186 997 00 82	Rubber ring	2	
68	186 268 02 73	Lock	1	
69	183 990 35 40	Shim	1	

10/024

Fig. No.	No. of spare part	Denomination	Quantity	Remarks
70	186 268 02 74	Pin	1	
71	182 993 08 01	Pressure spring	1	
72	180 268 03 97	Sleeve	1	
73	180 268 00 24	Shifting lever	1	
74	183 268 00 92	Rubber pad	1	
75	180 268 00 57	Cap	1	
76	186 268 00 40	Shifting lever button, black	1	
-	186 268 01 40	Shifting lever button, ivory	1	special request
77	120 260 21 94	Bearing body with sleeve	1	
78	180 462 08 96	Sleeve (for steering passage)	1	
-	-	Button-hd. rivet 2,6x10 DIN 660 A1	3	
79	120 260 01 95	Rubber mounting, bottom	1	
80	-	Circlip A 18x1, 2 K N 55 b	1	
82	180 260 02 78	Intermediate shaft with ball pin	1	
83	000 981 22 10	Needle bearing HK 14	2	
85	180 997 09 40	Sealing ring	2	
86	180 990 23 40	Washer	2	
87	180 260 02 81	Intermediate lever	1	

Fig. No.	No. of spare part	Denomination	Quantity	Remarks
88	-	Hex.-hd. screw M 7x20 DIN 931-8 G	1	)for clamping)intermediate)lever at inter-
89	-	Lock washer B 7 DIN 127	1	)mediate shaft
89a	000 546 18 41	Cable connector, 2 poles (for reverse drive lamp)	1	
89b	-	Cylindr. screw AM 4x12 DIN 84-5 S (for cable connector at bearing body, steering)	2	
90	180 260 02 37	Selector lever	1	
91	180 268 00 32	Selector lever shaft	1	
91a	312 990 03 40	Washer	1	))
92	-	Hex.-hd. screw M 8x30 DIN 931-8 G	1	)for selector) lever at) selector lever
93	-	Lock washer B 8 DIN 127	1	)shaft)
94	-	Hex. nut M 8 DIN 934-5 S	1	)
95	000 981 21 10	Needle bearing HK 12	2	
95a	180 997 08 40	Sealing ring	1	
95b	180 991 10 40	Spacer sleeve	1	
96	183 261 04 74	Pressure pin 40 mm long (for reverse drive lamp switch) (shorten pin as required)	1	
97	000 545 02 06	Reverse drive lamp switch	1	see also group 54

Fig. No.	No. of spare part	Denomination	Quantity	Remarks
98	000 546 00 35	Rubber protective cap (for reverse drive lamp switch)	1	
99	186 268 02 15	Selector lever)) at shifting tube	1	))optional
-	180 268 02 15	Selector lever)	1	)
100	-	Lock washer B 6 DIN 127	1	)
101	-	Hex. -hd. screw M 6x18 DIN 933-8 G	1	) for selector) lever at selec-) tor lever shaft)
102	180 268 03 05	Cover (for bearing body)	1	
103	-	Hex. -hd. screw M 8x45 DIN 931-8 G	2	))
104	-	Locking plate 8, 4 DIN 463	2	)for cover at)bearing body)
105	-	Hex. nut M 8 DIN 934-5 S	2	)
106	180 268 01 97	Sleeve	1	
107	180 260 07 15	Lever (at shifting tube, bottom)	1	
108	-	Lock washer B 7 DIN 127	1	)
109	-	Hex. -hd. screw M 7x20 DIN 931-8 G	1	) for lever at) shifting tube)
110	000 268 00 66	Springy ball socket 10	1	
111	000 993 58 01	Pressure spring	1	
112	-	Locking clamp S 10 DIN 71805	2	

Fig. No.	No. of spare part	Denomination	Quantity	Remarks
113	180 462 03 96	Sleeve	1	
114	180 268 02 05	Dust cap	1	
115	180 268 00 80	Gasket	1	
116	-	Cyl. screw AM 4x8 DIN 84-4 S	2	)for dust cap)at bearing
117	-	Lock washer B 4 DIN 127	2	)body
118	120 260 29 33	Shifting rod	1	
119	-	Hex. nut M 10 DIN 70616-5 S chromium-plated	1	
120	180 991 00 22	Ball socket	1	
121	-	Securing yoke S 13 DIN 71805 (for shifting rod at lever, bearing body)	1	
122	120 260 24 33	Selector rod	1	
123	-	Hex. nut M 10 DIN 70616-5 S chromium-plated	1	
124	180 991 00 22	Ball socket	1	
125	-	Securing yoke S 13 DIN 71805 (for selector rod at lever, bearing body)	1	
126	-	Lock washer 8 N 55 a	2	))for mounting
127	183 990 42 40	Washer	2	)shifting and)selector rod
128	-	Cotter pin 2 x 15 DIN 94	2	)

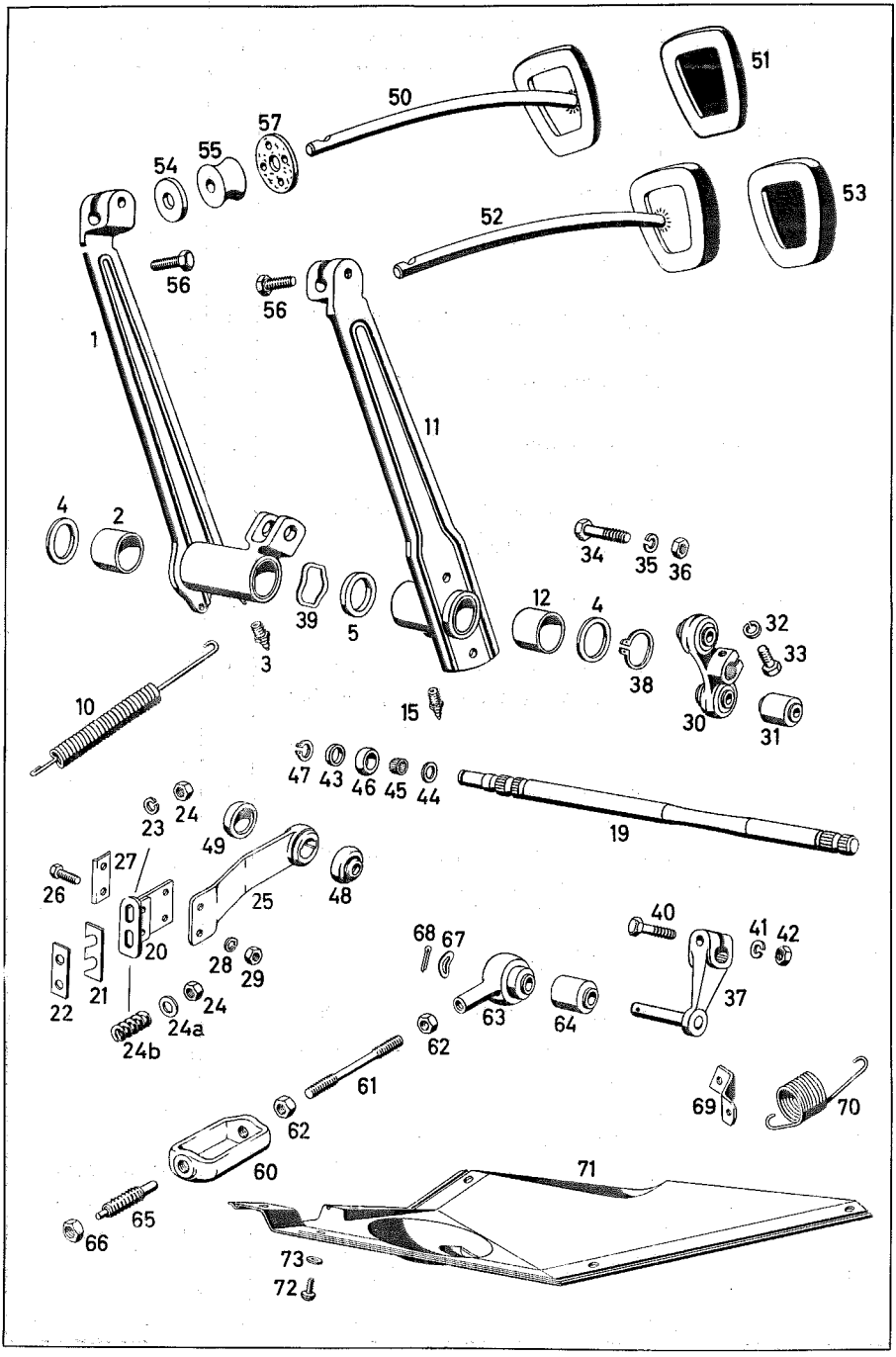
51
50
57
54
55
53
52
56
56
1
11
4
2
34
35
36
12
4
39
5
3
38
32
33
10
15
30
31
47
43
46
45
44
19
23
24
49
27
26
25
48
40
41
42
68
67
20
28
29
37
22
21
24
24a
24b
63
64
62
61
62
69
70
60
71
65
66
73
72

Fig. No.	No. of spare part	Denomination	Quantity	Remarks
		BRAKE PEDAL		
1	180 290 01 18	Brake pedal with bushing	1	
2	120 292 05 50	Bushing	2	
3	-	Grease fitting A 8 DIN 71412	1	
4	120 990 28 40	Washer) for brake pedal at tube,	2	
5	120 990 36 40	Washer) pedal mounting	1	
10	180 993 10 10	Release spring (for brake pedal)	1	
		CLUTCH PEDAL		
11	120 290 25 16	Clutch pedal	1	
12	120 292 05 50	Bushing	2	
15	-	Release A 8 DIN 71412	1	
19	120 293 05 06	Pedal shaft (for clutch operation)	1	
20	121 290 00 33	Bracket (for clutch housing)	1	
21	120 293 01 88	Shim 1 mm thick	a.r.	)between clutch)housing and
-	120 293 02 88	Shim 2 mm thick	a.r.	)bracket

10/024

Fig. No.	No. of spare part	Denomination	Quantity	Remarks
22	120 293 03 88	Shim (for bracket at clutch housing)	1	
23	-	Lock washer B 7 DIN 127	1	
24	-	Hex. nut M 7 DIN 934-5 S	3	
24a	-	Washer 7,4 DIN 125	1	
24b	312 993 53 01	Pressure spring	1	
25	180 290 04 21	Swivel support	1	
26	-	Hex.-hd. screw M 6x15 DIN 933-12 K	2	))for swivel)support at
27	120 293 01 43	Supporting plate	1	)bracket, clutch)housing
28	-	Lock washer B 6 DIN 127	2	))
29	000 990 54 51	Hex. nut M 6	2	)
30	120 290 03 46	Flange with silent block	1	
31	120 988 00 10	Silent block	2	
32	-	Lock washer B 7 DIN 127	1	))for flange at
33	-	Hex.-hd. screw M 7x25 DIN 931-8 G	1	) pedal shaft)
34	-	Hex.-hd. screw M 8x38 DIN 931-8 G	2	)))for flange at
35	-	Lock washer B 8 DIN 127	2	)clutch pedal)
36	-	Hex. nut M 8 DIN 934-5 S	2	)

Fig. No.	No. of spare part	Denomination	Quantity	Remarks
37	120 290 07 34	Bracket (for clutch operation)	1	
38	-	Circlip 26x1, 2 DIN 471	1	for clutch pedal at pedal shaft
39	120 990 02 48	Lock washer 0.2 mm thick	a.r.	for clutch pedal at pedal shaft
-	120 990 03 48	Lock washer 0.4 mm thick	a.r.	for clutch pedal at pedal shaft
40	-	Hex.-hd. screw M 7x30 DIN 931-8 G	1	for lever clutch operation at pedal shaft
41	-	Lock washer B 7 DIN 127	1	for lever clutch operation at pedal shaft
42	-	Hex. nut M 7 DIN 934-5 S	1	for lever clutch operation at pedal shaft
43	120 291 00 51	Spacer ring	1	
44	-	Washer 10x16x1 DIN 988	1	
45	000 981 18 10	Needle cage K 10/10	1	
46	198 991 00 29	Ball for pedal shaft	1	
47	-	Circlip 10x1 DIN 471 (for ball at pedal shaft)	1	
48	120 291 03 88	Sleeve	1	
49	120 291 02 88	Rubber cap (for ball guide)	1	
50	120 290 10 23	Clamp (for brake pedal)	1	
51	153 292 00 82	Cover	1	

10/024

Fig. No.	No. of spare part	Denomination	Quantity	Remarks
52	121 290 05 22	Clamp (for clutch pedal)	1	
53	121 291 00 82	Cover	1	
54	136 224 01 66	Shim	2	)for clutch and)brake pedal
55	120 291 03 97	Gasket	2	)sealing
56	-	Hex.-hd. screw M 8x20 DIN 933-8 G (for clamp at clutch and brake pedal)	2	
57	136 290 00 67	Gasket (for brake and clutch pedal)	2	
		CLUTCH OPERATION		
60	120 293 02 32	Shackle	1	
61	-	Pull rod 8x128x32/32 left N 331	1	
62	-	Hex. nut M 8 left DIN 934-5 S	2	
63	186 240 01 21	Rod end M 8 left	1	
64	186 988 00 10	Silent block	1	
65	180 293 00 76	Threaded pin (for release fork)	1	
66	-	Hex. nut M 10 DIN 936-5 S	1	
67	-	Washer 10 N 55 a (for pull rod at lever)	1	

Fig. No.	No. of spare part	Denomination	Quantity	Remarks
68	-	Cotter pin 3x15 DIN 94 (for pull rod at lever)	1	
69	121 293 08 40	Bracket (for release spring)	1	
70	121 993 02 10	Release spring	1	
71	120 524 11 33	Underpan	1	
72	-	Lens-hd. countersunk screw Z 4,2x13 DIN 7981	6	for underpan at frame, chassis
73	-	Washer 4,3 DIN 125	6	

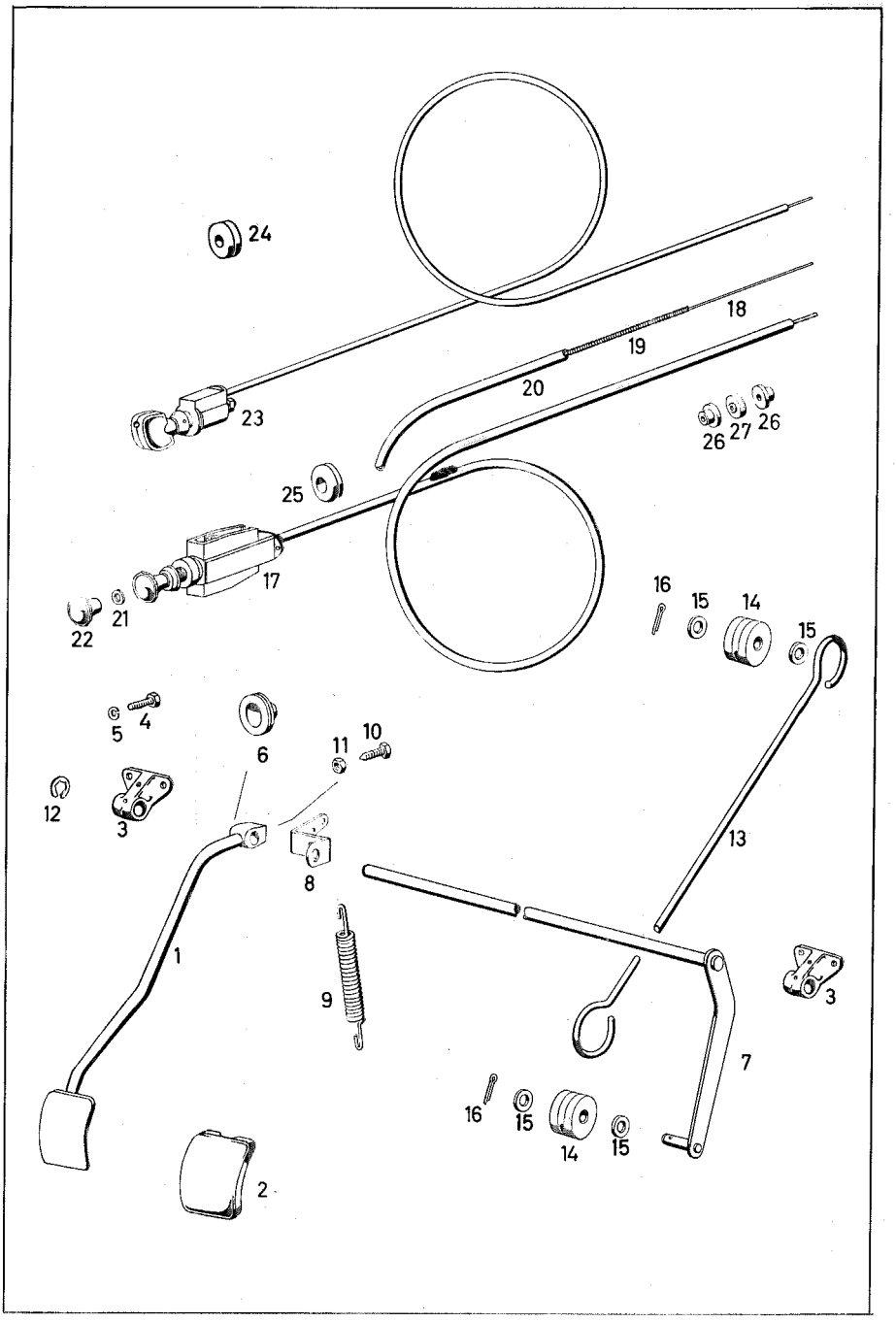
24
23
18
19
20
26
27
26
25
17
22
21
16
15
14
15
5
4
6
11
10
12
3
8
13
1
9
3
7
16
15
14
15
2

Fig. No.	No. of spare part	Denomination	Quantity	Remarks
		ACCELERATOR PEDAL CONTROL		
1	121 301 06 01	Accelerator pedal	1	
2	121 301 00 82	Coating with fabric layer	1	
3	121 301 00 18	Bearing	2	
4	-	Hex.-hd. screw M 6x15 DIN 933-8 G	4	))for bearing
5	-	Lock washer B 6 DIN 127	4	)at dashboard)
6	183 997 00 81	Rubber grommet (for accelerator pedal through dashboard)	1	
7	121 300 03 20	Control shaft	1	
8	121 302 00 14	Lever (for release spring)	1	
9	180 993 17 10	Release spring (for accelerator pedal)	1	
10	180 990 00 17	Fixing screw	1	))for acc. pedal
11	-	Hex. nut M 6 DIN 934-5 S	1	)at control)
12	-	Circlip G 12x1, 2 N 55 e	1	)shaft and)bearing
13	121 301 02 15	Thrust rod	1	
14	180 301 00 97	Damper ring	2	))for thrust rod
15	-	Washer 8, 4 DIN 125	4	)at control)
16	-	Cotter pin 2x15 DIN 94	2	)and double)lever)

10/024

Fig. No.	No. of spare part	Denomination	Quantity	Remarks
		CHOKE		
17	180 300 06 30	Choke	1	
18	-	Spring steel wire III 1, 5 Ø DIN 2076, 990 mm lg.	1	)))
19	000 988 01 72	Wire coil 900 mm long	1	) state length) when ordering
20	-	Insulating hose B 5x6, 2 DIN 40621, 880 mm lg.	1	))
21	000 997 20 40	Felt ring	1	) for choke at) switchboard
22	120 302 04 01	Button	1	)
		IGNITION TIMING		
23	180 300 00 32	Wire cable (for ignition timing)	1	
24	000 997 16 81	Rubber grommet (for ignition timing through bracket)	1	
25	000 997 18 81	Rubber grommet (for choke through dashboard)	1	
26	180 997 09 81	Rubber grommet	2	) for choke at) carburettor
27	180 302 00 72	Adjusting nut	1	)

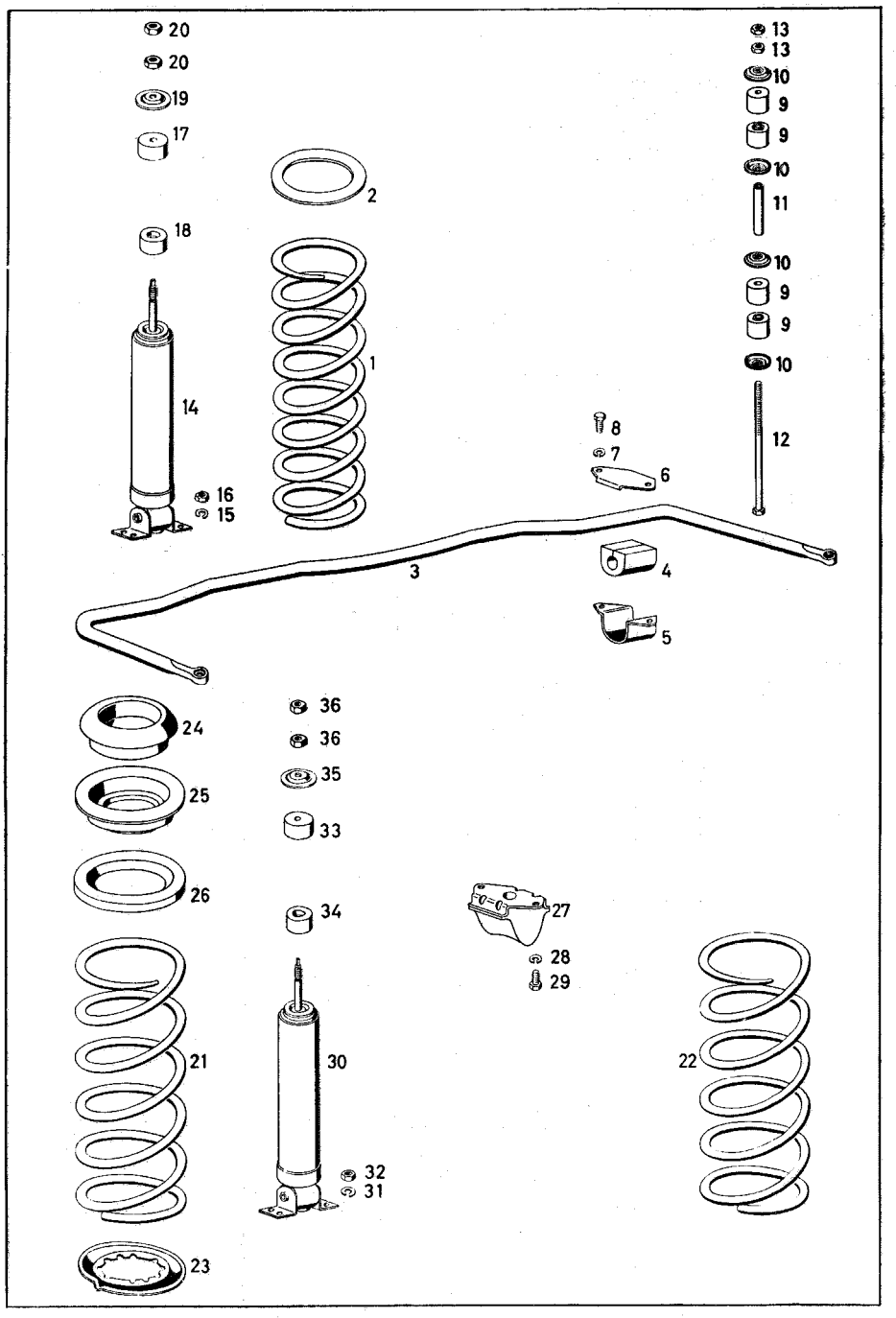
20
20
19
17
18
14
16
15
2
1
13
13
10
9
9
10
11
10
9
9
10
12
8
7
6
3
4
5
24
25
26
21
23
36
36
35
33
34
30
32
31
27
28
29
22

Fig. No.	No. of spare part	Denomination	Quantity	Remarks
		FRONT SPRING		
1	120 321 14 04	Front spring	2	
2	120 322 00 84	Washer	2	
		TORSION BAR FOR FRONT SPRING		
3	121 321 00 07	Torsion bar	1	
4	121 323 00 85	Rubber mounting	2	)
5	181 323 00 68	Bracket	2	) for torsion bar at body
6	181 323 00 84	Locking plate	2	)
7	-	Lock washer B 8 DIN 127	4	)
8	-	Hex. -hd. screw M 8x18 DIN 933-8 G	4	)
9	120 323 00 44	Rubber buffer	8	)
10	120 323 00 67	Washer	8	) for torsion bar at wishbone, bottom
11	120 991 10 40	Spacer tube	2	)
12	-	Hex. -hd. screw M 8x165 DIN 931-8 G	2	)
13	-	Hex. nut M 8 DIN 934-5 S	4	)
		SHOCK ABSORBER, FRONT		
14	000 323 60 00	Shock absorber, front)) optional	2	
-	000 323 56 00	Shock absorber, front)	2	

Fig. No.	No. of spare part	Denomination	Quantity	Remarks
15	-	Lock washer B 7 DIN 127	8	)for shock absorber at wish-
16	-	Hex. nut M 7 DIN 934-5 S	8	)bone, bottom
17	180 323 01 85	Rubber ring, top	2	)
18	120 323 06 85	Rubber ring, bottom	2	)for shock absorber at front
19	180 323 00 83	Plate	2	)axle support
20	-	Hex. nut M 10x1 DIN 934-5 S	4	)
		REAR SPRING		
21	121 324 20 04	Rear spring, left	1	
22	121 324 21 04	Rear spring, right	1	
23	180 325 04 15	Spring retainer, bottom	2	
24	180 325 01 44	Rubber mounting	2	)
25	180 325 03 15	Spring retainer, top	2	)for rear spring at body
26	180 325 00 52	Spacer ring, top	a.r.	)
27	180 320 00 44	Rubber buffer lock	2	
28	-	Lock washer B 7 DIN 127	4	)
29	-	Hex.-hd. screw M 7x15 DIN 933-8 G	4	)for rubber buffer at body
		SHOCK ABSORBER, REAR		
30	121 320 03 31	Shock absorber, rear	2	optional with 000 326 41 00

Fig. No.	No. of spare part	Denomination	Quantity	Remarks
-	000 326 41 00	Shock absorber, rear	2	optional with 121 320 03 31
31	-	Lock washer B 7 DIN 127	8	)for shock absorber at
32	-	Hex. nut M 7 DIN 934-5 S	8	)thrust arm
33	180 323 03 85	Rubber ring, top	2	)
34	180 323 04 85	Rubber ring, bottom	2	) for shock absorber mounting
35	180 323 00 83	Plate	2	) top
36	-	Hex. nut M 10x1 DIN 934-5 S	4	)

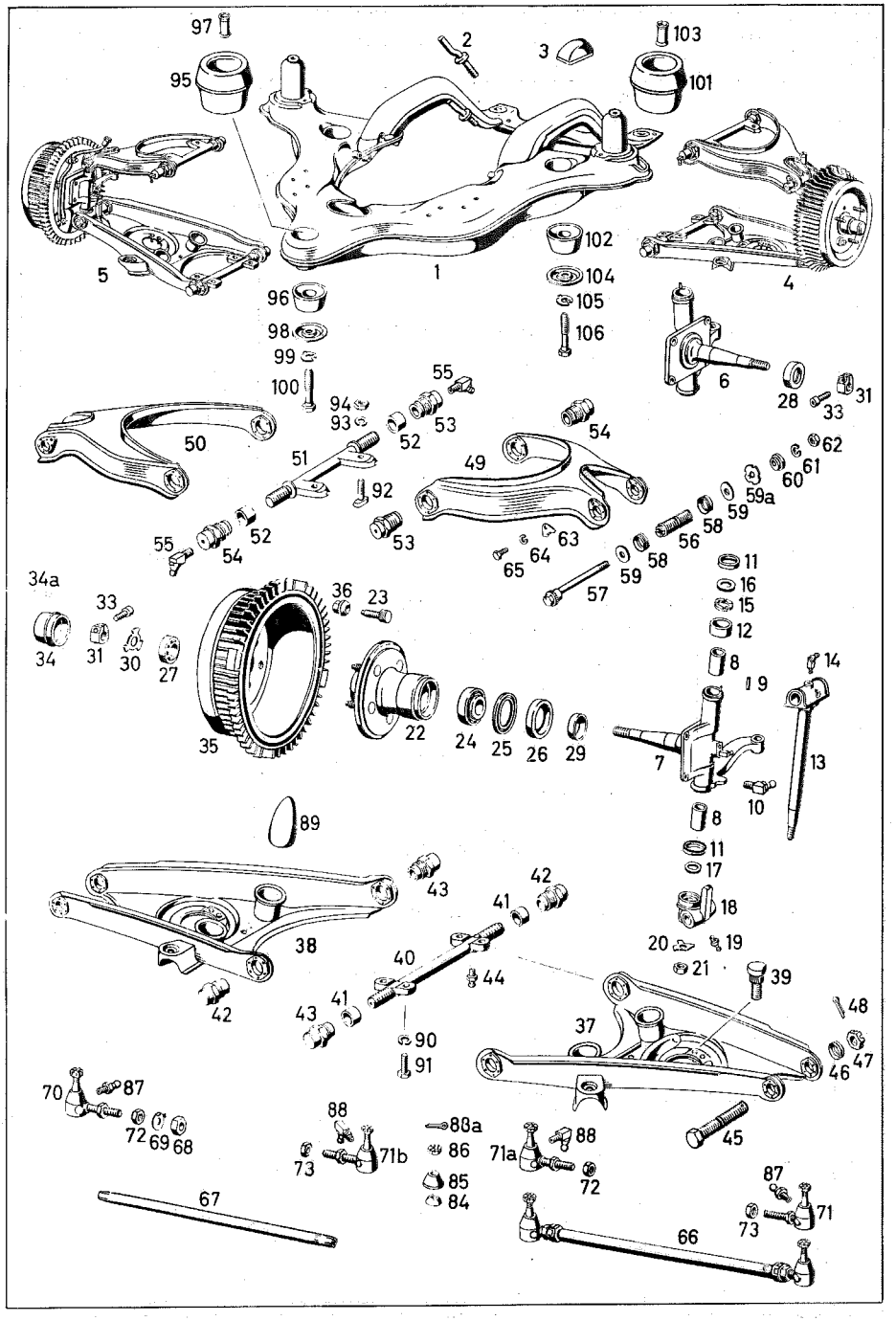
97
95
2
3
103
101
5
1
4
102
104
105
106
96
98
99
100
6
28
33
31
55
94
93
53
52
50
51
49
54
62
61
60
59a
59
58
56
92
53
55
54
52
65
64
63
59
58
57
34a
33
34
31
30
27
36
23
35
22
24
25
26
29
11
16
15
12
8
9
14
7
13
10
8
11
17
18
89
43
42
41
38
40
44
20
19
21
39
48
47
46
37
45
42
43
41
90
91
70
87
72
69
68
88
73
71b
88a
86
85
84
71a
88
72
87
71
73
67
66

Fig. No.	No. of spare part	Denomination	Quantity	Remarks
		FRONT AXLE		
1	121 330 02 42	Front axle support with rear engine mounting	1	
2	121 460 02 35	Bracket (for steering shock absorber, welded on)	1	
3	181 333 01 65	Rubber buffer	2	
4	121 330 02 98	Front axle half, left	1	
5	121 330 03 98	Front axle half, right	1	
6	180 330 22 20	Steering knuckle, left (without locking groove with right-hand thread)	1	
7	180 330 23 20	Steering knuckle, right (without locking groove with right-hand thread)	1	
8	180 332 01 48	Bushing 38 mm long	4	
9	-	Cylindr. pin 2, 5 h8x6 DIN 7	2	
10	-	Grease fitting B 8 DIN 71412	2	
11	120 332 02 60	Dust cover	4	
12	120 332 00 51	Dust sleeve	2	
13	120 332 05 06	King pin	2	
14	-	Grease fitting B 8 DIN 71412	2	

Fig. No.	No. of spare part	Denomination	Quantity	Remarks
15	120 332 01 62	Pressure plate, bottom	2	
16	120 332 02 62	Pressure plate, top	2	
17	136 332 00 52	Shim 2.30 mm thick))	2	))
-	136 332 01 52	Shim 2.50 mm thick))	2	))for king pin
-	136 332 02 52	Shim 2.70 mm thick)) optional	2	)at steering)knuckle,
-	136 332 08 52	Shim 1.70 mm thick))	2	)bottom)
-	136 332 09 52	Shim 1.90 mm thick))	2	))
-	136 332 10 52	Shim 2.10 mm thick)	2	)
18	120 333 05 09	Steering knuckle support	2	
19	-	Grease fitting A 8 DIN 71412	2	
20	181 994 00 15	Locking plate	2	
21	-	Hex. nut M 14 x 1,5 DIN 934-5 S	2	
		FRONT WHEEL HUB		
22	180 330 07 25	Front wheel hub with pin	2	
23	120 401 01 71	Wheel fixing pin	10	
24	-	Tapered roller bearing 32206 DIN 720	2	
25	180 334 01 64	Puller ring)) for front wheel hub	2	
26	000 997 18 46	Sealing ring)	2	

10/024

Fig. No.	No. of spare part	Denomination	Quantity	Remarks
27	-	Tapered roller bearing 32303 DIN 720	2	
28	180 334 00 62	Intermediate ring (for front steering knuckle, left)	1	
29	180 334 01 62	Intermediate ring (for front steering knuckle, right)	1	
30	120 334 03 15	Washer (for steering knuckle without locking groove)	2	
31	120 334 07 72	Clamping nut M 16 x 1 (for left and right steering knuckle)	2	
33	120 990 13 20	Hex.-hd. socket screw M 7	2	
34	120 330 01 57	Wheel cap with contact spring	2	
34a	-	Grooved guide pin 4 x 10 DIN 1474 Ms	2	for radio interference suppression
35	180 421 08 01	Brake drum	2	
36	120 990 00 59	Sph. collar nut (for brake drum at wheel pin, front wheel hub)	4	see also group 35 and 40
		WISHBONE, BOTTOM		
37	120 330 12 08	Wishbone, bottom, left	1	
38	120 330 13 08	Wishbone, bottom, right	1	
39	120 990 10 20	Cylindr. screw	8	

Fig. No.	No. of spare part	Denomination	Quantity	Remarks
40	120 333 02 30	Pin	2	
41	120 333 01 80	Sealing ring	4	)
42	120 333 02 48	Threaded bushing (left, rear and right, front)	2	) for wishbone, inner
43	120 333 03 48	Threaded bushing (left, front and right, rear)	2	)
44	120 997 00 88	Grease fitting	4	)
45	120 333 04 74	Threaded pin with lubricating groove	2	) for wishbone, bottom, at steering knuckle support
46	181 333 01 80	Sealing ring	4	)
47	181 990 00 55	Castle nut	2	)
48	-	Cotter pin 3x35 DIN 94	2	)
		WISHBONE, TOP		
49	120 330 04 07	Wishbone, top, left	1	
50	120 330 05 07	Wishbone, top, right	1	
51	120 333 00 30	Pin	2	
52	120 333 01 80	Sealing ring	4	)
53	120 333 02 48	Threaded bushing (left, front and right, rear)	2	) for wishbone, inner
54	120 333 03 48	Threaded bushing (left, rear and right, front)	2	)
55	-	Grease fitting B 8 DIN 71412	4	)
56	120 333 05 48	Threaded bushing with lubricating groove	2	
57	120 333 03 74	Eccentric pin	2	
58	181 333 01 80	Sealing ring	4	
59	120 990 13 40	Washer	2	

Fig. No.	No. of spare part	Denomination	Quantity	Remarks
59a	120 990 32 40	Adjusting washer	2	
60	120 330 01 87	Eccentric bushing	2	
61	-	Lock washer B 10 DIN 127	2	
62	-	Hex. nut M 10 DIN 934-5 S	2	
63	120 333 00 73	Locking plate	2	
64	-	Lock washer B 6 DIN 127	2	
65	-	Hex.-hd. screw M 6x10 DIN 933-8 G	2	
		TIE ROD		
66	120 330 07 03	Tie rod	2	when mounting take care that the grease fitting A 8 DIN 71412 is always mounted on outside (at disc wheel)
67	120 338 01 15	Tie rod jacket	2	
68	120 338 00 63	Tightening ring	4	
69	120 994 00 15	Locking plate	4	
70	120 330 05 48	Ball socket head (right-hand thread) (for tie rod, right, outside)	1	)) grease fitting) A 8 DIN 71412
71	120 330 04 48	Ball socket head (left-hand thread) (for tie rod, left, outside)	1	) mounted on) inside))

Fig. No.	No. of spare part	Denomination	Quantity	Remarks
71a	121 330 07 48	Ball socket head (right-hand thread) (for tie rod, left, inside)	1	grease fitting 120 997 00 88 mounted on outside
71b	121 330 06 48	Ball socket head (left-hand thread) (for tie rod, right, inside)	1	
72	-	Hex. nut M 14x1,5 DIN 936-5S	2	
73	-	Hex. nut M 14x1,5 left DIN 936-5 S	2	
84	120 338 00 57	Sealing cover	4	
85	120 338 01 97	Boot	4	
86	120 990 01 55	Castle nut	4	
87	-	Grease fitting A 8 DIN 71412	2	
88	120 997 00 88	Grease fitting	2	
88a	-	Cotter pin 2x25 DIN 94 (for tie rod at steering lever and steering knuckle)	4	
89	186 333 00 65	Rubber buffer	4	
90	-	Lock washer B 12 DIN 127	8	for wishbone, bottom at front axle support
91	-	Hex. -hd. screw M 12x1,5x28 DIN 961-8 G	8	
92	120 333 00 71	Screw	4	for wishbone, top at front axle support
93	-	Lock washer B 12 DIN 127	4	

Fig. No.	No. of spare part	Denomination	Quantity	Remarks
94	-	Hex. nut M 12x1,5 DIN 934-5 S (for wishbone, top at front axle support)	4	
		FRONT AXLE SUSPENSION		
95	180 333 02 65	Rubber buffer, in one piece (for mounting front axle support, front)	1	)
96	120 333 19 65	Rubber buffer, bottom	1	) for front sus-
97	120 333 04 53	Spacer sleeve	1	) pension of front axle
98	120 330 01 55	Plate	1	) support at body
99	120 994 00 13	Locking plate	1	)
100	120 990 14 01	Hex. -hd. screw	1	)
101	180 333 01 65	Rubber buffer, in one piece (for mounting front axle support, rear)	2	)
102	120 333 19 65	Rubber buffer, bottom	2	)
103	120 333 04 53	Spacer sleeve	2	) for rear sus-) pension of) front axle
104	120 330 01 55	Plate	2	) support at) body
105	120 994 00 13	Locking plate	2	)
106	120 990 14 01	Hex. -hd. screw	2	)

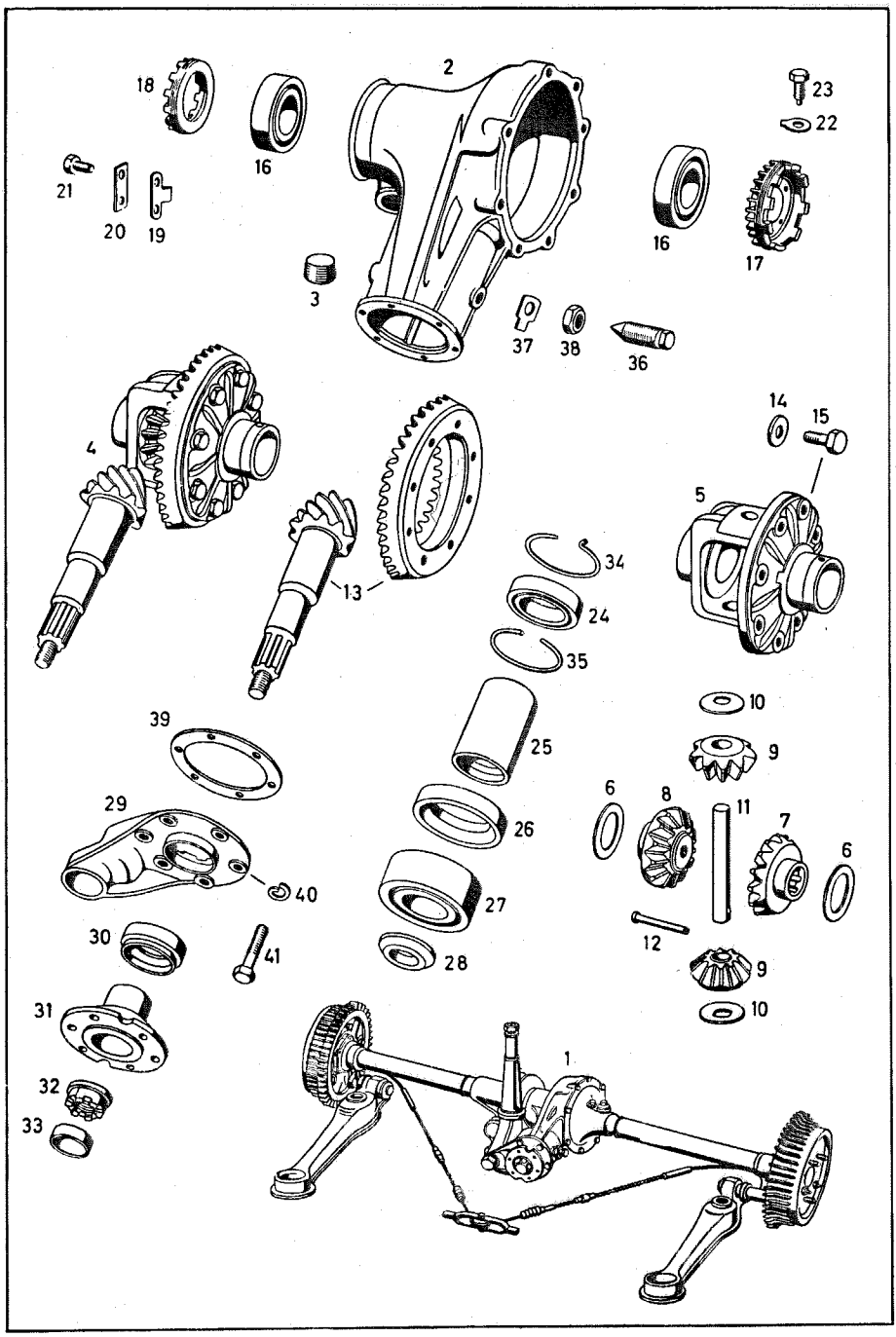
1
2
3
4
5
6
7
8
9
10
11
12
13
14
15
16
17
18
19
20
21
22
23
24
25
26
27
28
29
30
31
32
33
34
35
36
37
38
39
40
41

Fig. No.	No. of spare part	Denomination	Quantity	Remarks
		REAR AXLE		
1	180 350 12 00	Rear axle, complete with thrust arm, ratio 1 : 4, 10	1	
-	180 350 10 00	Rear axle housing, complete with left rear axle tube, without sliding joint, without right rear axle tube and without rear axle shafts ratio 1 : 4, 10	1	
		REAR AXLE HOUSING		
2	180 350 01 20	Rear axle housing, complete	1	
3	-	Screw plug M 24x1, 5 DIN 906 (for draining and filling in oil)	2	
		DIFFERENTIAL GEAR		
4	180 350 05 23	Differential gear, complete without tapered roller bearing ratio 1 : 4, 10	1	
5	180 353 05 01	Differential gear housing	1	
6	180 353 10 62	Guard plate 1.3 mm thick	2	)
-	180 353 11 62	Guard plate 1.4 mm thick	2	)
-	180 353 12 62	Guard plate 1.5 mm thick	2	)optional
-	180 353 13 62	Guard plate 1.6 mm thick	2	)
-	180 353 14 62	Guard plate 1.7 mm thick	2	)
7	180 353 05 15	Rear axle shaft gear, left 16 teeth	1	

Fig. No.	No. of spare part	Denomination	Quantity	Remarks
8	180 350 03 40	Rear axle side gear, right 16 teeth	1	
9	183 353 00 14	Spider gear 10 teeth	2	
10	136 353 05 24	Spherical washer	2	for spider gear
11	180 353 00 21	Spider gear shaft	1	
12	136 353 02 74	Locking pin (for spider gear shaft)	1	
13	180 350 02 39	Drive pinion with crown wheel ratio 1 : 4, 10	1	
14	120 994 00 10	Locking plate	8	for crown wheel at differential housing
15	183 990 01 01	Hex. -hd. screw M 10 f x 20	8	
16	000 981 14 05	Tapered-roller bearing	2	
17	180 353 08 25	Threaded ring (for rear axle housing flange)	1	
18	180 353 06 25	Threaded ring (for rear axle hos	1	
19	180 353 01 73	Locking plate	1	for differential gear at rear axle housing
-	180 353 02 73	Locking plate	1	
-	180 353 03 73	Locking plate optional	1	
-	180 353 05 73	Locking plate	1	
-	180 353 06 73	Locking plate	1	
20	180 994 00 30	Locking plate	1	

10/024

Fig. No.	No. of spare part	Denomination	Quantity	Remarks
21	-	Hex.-hd. screw M 6x12 DIN 933-8 G (for differential gear at rear axle housing)	2	
22	180 994 01 10	Locking plate	1	)for threaded)ring at rear
23	180 990 02 15	Locking screw	1	)axle tube, left
24	000 981 16 01	Cylindrical roller bearing	1	
25	180 353 00 40	Spacer sleeve	1	
26	180 353 01 48	Pressure ring	1	
27	000 981 04 27	Angular contact bearing, double-row	1	)))optional
-	000 981 07 27	Angular contact bearing, double-row	1	))
28	180 353 00 63	Shoulder ring	1	
29	180 353 03 08	Cover	1	
30	000 997 13 46	Sealing ring 35x55x12/16	1	
31	180 350 01 45	Joint flange	1	
32	120 350 00 66	Grooved nut	1	
33	120 994 00 44	Lock	1	
34	120 994 02 35	Snap ring, rear	1	
35	-	Snap ring, front 80 DIN 9045	1	
36	183 351 01 70	Adjusting screw (for pressure ring)	2	

Fig No.	No. of spare part	Denomination	Quantity	Remarks
37	-	Locking plate 15 DIN 93	2	for adjusting screw
38	180 990 01 50	Hex. nut	2	
39	120 353 24 52	Shim 1.00 mm thick	1	
-	120 353 26 52	Shim 1.10 mm thick	1	
-	120 353 28 52	Shim 1.20 mm thick	1	
-	120 353 30 52	Shim 1.30 mm thick	1	
-	120 353 32 52	Shim 1.40 mm thick	1	
-	120 353 34 52	Shim 1.50 mm thick	1	optional
-	120 353 36 52	Shim 1.60 mm thick	1	
-	120 353 38 52	Shim 1.70 mm thick	1	
-	120 353 40 52	Shim 1.80 mm thick	1	
-	120 353 42 52	Shim 1.90 mm thick	1	
-	120 353 44 52	Shim 2.00 mm thick	1	
-	120 353 45 52	Shim 2.05 mm thick	1	
40	-	Lock washer B 7 DIN 127	6	for cover, sealing ring, front, at rear axle housing
41	-	Hex.-hd. screw M 7x20 DIN 931-8 G	6	

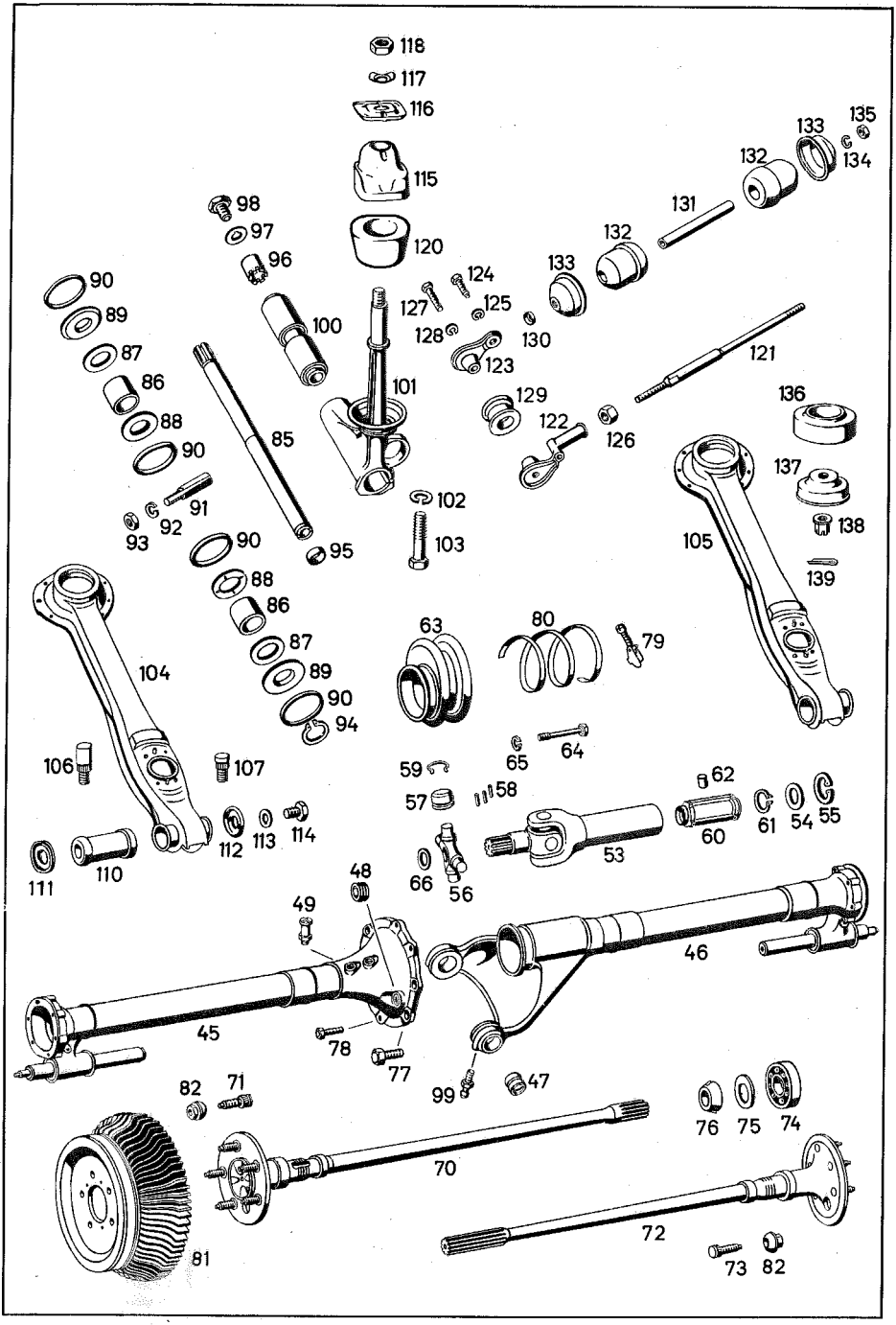
118
117
116
115
98
97
96
120
100
90
89
87
86
88
90
91
92
93
85
95
101
124
127
125
128
130
123
133
132
131
132
133
135
134
121
129
122
126
136
137
138
139
105
102
103
90
88
86
87
89
90
94
104
63
80
79
65
64
59
57
58
106
107
112
113
114
111
110
66
56
53
62
60
61
54
55
48
49
45
78
77
46
99
47
82
71
70
76
75
74
72
73
82
81

Fig. No.	No. of spare part	Denomination	Quantity	Remarks
		REAR AXLE TUBE		
45	180 350 44 19	Rear axle tube, left, with thrust arm support and locking screw	1	
46	180 350 32 19	Rear axle tube, right, with thrust arm support	1	
47	180 351 01 50	Bushing (for rear axle tube, right)	2	
48	-	Locking screw M 24x1,5 DIN 906 (for oil filling at rear axle tube, left)	1	only valid for rear axle tube 180 350 44 19
49	180 350 02 90	Fan (for rear axle tube)	1	
		SLIDING JOINT		
53	180 350 05 13	Sliding joint, supported by roller bearing	1	
54	180 357 00 52	Washer	2	) in joint fork
55	-	Circlip 48x1, 75 DIN 472	2	)
56	180 357 00 13	Universal spider	1	
57	120 357 01 14	Needle bearing bushing	4	
58	-	Needles 2,5 Ø x 11,8 DIN 617	100	
59	120 994 01 35	Snap ring 2, 25 mm thick	a.r.	)
-	120 994 04 35	Snap ring 2, 35 mm thick	a.r.	) optional
-	120 994 06 35	Snap ring 2, 40 mm thick	a.r.	)

Fig. No.	No. of spare part	Denomination	Quantity	Remarks
-	120 994 07 35	Snap ring 2,45 mm thick	a.r.	optional
-	120 994 08 35	Snap ring 2,55 mm thick	a.r.	optional
60	180 350 07 13	Sliding sleeve with guide plate	1	
61	-	Circlip 32x1,5 DIN 471	2	
62	180 981 00 86	Cylindr. roller 4 x 4	132	
63	180 357 05 91	Rubber sleeve	1	
64	180 353 00 76	Tightening screw, interior	1	for joint fork
65	-	Lock washer B 10 DIN 127	1	for joint fork
66	180 353 30 52	Shim 1.00 mm thick	1	optional
-	180 353 31 52	Shim 1.10 mm thick	1	optional
-	180 353 33 52	Shim 1.20 mm thick	1	optional
-	180 353 35 52	Shim 1.30 mm thick	1	optional
-	180 353 37 52	Shim 1.40 mm thick	1	for joint fork, interior
-	180 353 39 52	Shim 1.50 mm thick	1	optional
-	180 353 41 52	Shim 1.60 mm thick	1	optional
-	180 353 43 52	Shim 1.70 mm thick	1	optional
-	180 353 45 52	Shim 1.80 mm thick	1	optional
-	180 353 47 52	Shim 1.90 mm thick	1	optional
-	180 353 49 52	Shim 2.00 mm thick	1	optional

Fig. No.	No. of spare part	Denomination	Quantity	Remarks
		REAR AXLE SHAFT		
70	180 350 13 10	Rear axle shaft, left	1	
71	120 401 01 71	Wheel mounting pin	5	
72	180 350 14 10	Rear axle shaft, right	1	
73	120 401 01 71	Wheel mounting pin	5	
74	180 981 00 25	Annular grooved bearing	2	)
75	183 353 03 73	Locking plate	2	) for rear axle shaft
76	153 357 00 26	Grooved nut	2	)
77	-	Hex.-hd. screw M 10x22 DIN 933-8 G	4	
78	-	Hex.-hd. screw M 7x22 DIN 933-8 G	4	
79	-	Hose clamp S 9 N 262	2	
80	-	Hose strap 9x0,4 N 263	a.r.	state length when ordering
81	180 421 08 01	Brake drum with radial fins	2	
82	120 990 00 59	Collar nut	4	see also group 33 and 40
		REAR AXLE SUSPENSION		
85	180 351 06 74	Pin (for rear axle suspension)	1	

Fig. No.	No. of spare part	Denomination	Quantity	Remarks
86	180 351 01 53	Sleeve (between rear axle tube support and pin)	2	
87	180 351 05 52	Washer 2.0 mm thick (for rear axle tube, exterior)	2	
88	180 351 13 52	Shim 1.9 mm thick)	2	)
-	180 351 14 52	Shim 2.0 mm thick)	2	)
-	180 351 15 52	Shim 2.1 mm thick)	2	) between rear
-	180 351 16 52	Shim 2.2 mm thick) optional	2	) axle tube and) rear axle hous-
-	180 351 17 52	Shim 2.3 mm thick)	2	) ing, interior)
-	180 351 18 52	Shim 2.4 mm thick)	2	))
-	180 351 19 52	Shim 2.5 mm thick)	2	)
89	180 351 03 51	Washer (on pin at rear axle tube support, exterior)	2	
90	180 351 09 86	Rubber ring (above shims)	4	
91	180 351 00 74	Key	1	) for pin at) rear axle
92	-	Lock washer B8 DIN 127	1	) housing

Fig. No.	No. of spare part	Denomination	Quantity	Remarks
93	-	Hex. nut M 8 DIN 934-5 S (for pin at rear axle housing)	1	
94	180 994 03 41	Circlip	1	)) in pin
95	-	Locking cover 20 DIN 443	1	)
96	180 351 11 53	Spacer sleeve (on pin, front)	1	
97	180 994 01 12	Locking plate	1	)for pin at silent
98	180 997 04 30	Hex.-hd. screw	1	)block in)casing
99	-	Grease fitting A 6 DIN 71412 (in rear axle tube, right)	2	
100	180 350 08 75	Silent block)) optional	1	)in casing)rear axle sus-
-	180 350 09 75	Rubber mounting)	1	)pension
101	180 350 07 32	Casing with seat (for rear axle suspension)	1	
102	-	Lock washer B 10 DIN 127	2	))for silent block
103	-	Hex.-hd. screw M 10x35 DIN 931-8 G	2	)in casing)
104	180 350 00 29	Thrust arm, left	1	))for rear
105	180 350 01 29	Thrust arm, right	1	) axle)
106	120 990 09 20	Cylindr. screw	4	))for shock ab-
107	120 990 10 20	Cylindr. screw	4	))sorber mounting)

10/024

Fig. No.	No. of spare part	Denomination	Quantity	Remarks
110	120 352 07 65	Rubber mounting (for thrust arm, rear)	2	for thrust arm at rear axle tube
111	120 352 05 76	Tightening washer (rubber mounting, wheel side)	2	
112	120 352 06 76	Tightening washer (rubber mounting, screw side)	2	
113	120 994 04 12	Locking plate	2	
114	120 990 00 01	Hex.-hd. screw	2	
115	121 351 01 86	Rubber mounting with bushing	1	for rear axle suspension, top at body
116	180 351 10 45	Tightening washer	1	
117	180 351 03 73	Locking plate	1	
118	180 990 02 51	Hex. nut M 22 x 1, 5	1	
120	180 351 05 86	Rubber ring, bottom (for rear axle suspension, bottom at body)	1	
121	180 351 01 96	Cross strut	1	
122	180 351 05 40	Shackle) optional)	1	for rear axle suspension at body floor
-	180 351 14 40	Shackle) for cross strut)	1	
123	180 351 04 40	Shackle) optional)	1	
-	180 351 13 40	Shackle)	1	
124	-	Hex.-hd. screw M 12x1, 5x25 DIN 961-8 G (for shackle at cross strut)	1	

Fig. No.	No. of spare part	Denomination	Quantity	Remarks
125	-	Lock washer B 12 DIN 127	1	for shackle
126	-	Hex. nut M 12x1,5 DIN 934-5 S	1	at cross strut
127	-	Hex. -hd. screw M 12x1,5x35 DIN 960-8 G	1	for cross strut
128	-	Lock washer B 12 DIN 127	1	at casing
129	180 351 00 48	Rubber mounting	1	
130	180 351 00 76	Washer) for cross strut	1	
131	180 351 06 53	Spacer tube)	1	
132	180 351 07 44	Rubber buffer	2	
133	180 351 03 43	Cup (for cross strut)	2	
134	-	Lock washer B 12 DIN 127	1	for seat, rubber buffer
135	-	Hex. nut M 12 x 1,5 DIN 934-5 S	1	at cross strut
136	120 352 08 65	Rubber mounting (for thrust arm, front)	2	for thrust arm
137	120 352 05 67	Seat (for rubber mounting)	2	at body
138	120 352 00 72	Collar nut	2	
139	-	Cotter pin 3 x 25 DIN 94	2	

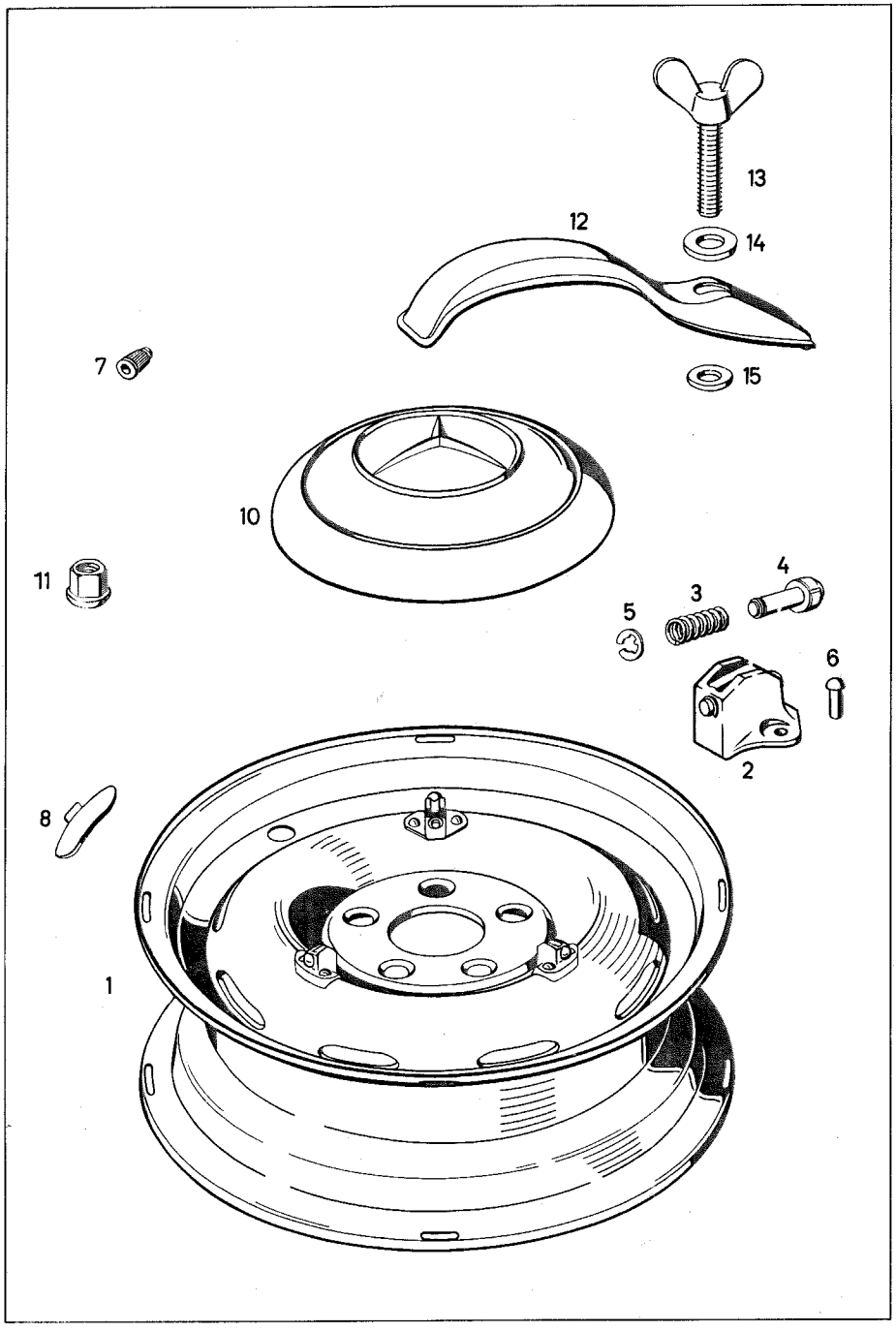
13
12
14
7
15
10
11
4
3
5
6
2
8
1

Fig. No.	No. of spare part	Denomination	Quantity	Remarks
		WHEELS		
1	121 400 01 02	Disc wheel with well base rim 4.5-K x 13 (for tires 6.4-13)	5	
2	180 400 04 26	Bracket for wheel cover	15	
3	180 993 22 01	Pressure spring	15	
4	180 401 00 74	Pin	15	
5	186 990 00 10	Locking plate	15	
6	-	Button-hd. rivet 3,5x10 DIN 660	30	
7	120 401 01 83	Valve cap with dust cap (for hose valve)	5	
8	186 400 30 94	Balancing weight 25 g)	a.r.	
-	186 400 29 94	Balancing weight 35 g)	a.r.	
-	186 400 28 94	Balancing weight 45 g)	a.r.	
-	186 400 27 94	Balancing weight 55 g)	a.r.	
-	186 400 26 94	Balancing weight 65 g)	a.r.	
-	186 400 25 94	Balancing weight 75 g) optional	a.r.	
-	186 400 24 94	Balancing weight 85 g) for disc	a.r.	
-	186 400 23 94	Balancing weight 95 g) wheel	a.r.	
-	186 400 22 94	Balancing weight 105 g)	a.r.	
-	186 400 21 94	Balancing weight 115 g)	a.r.	
-	186 400 20 94	Balancing weight 125 g)	a.r.	
-	186 400 19 94	Balancing weight 135 g)	a.r.	
-	186 400 18 94	Balancing weight 145 g)	a.r.	
-	186 400 17 94	Balancing weight 155 g)	a.r.	

10/024

Fig. No.	No. of spare part	Denomination	Quantity	Remarks
10	186 401 00 25	Wheel cover	4	
11	120 990 00 59	Sph. collar nut (for disc wheel at front and rear axle)	20	see also group 33 and 35
12	120 403 00 02	Clamp	1	))
13	-	Wing screw M 12x70 DIN 316	1	))for spare wheel) at bracket
14	-	Washer 13 DIN 125 without chamfer	1	)))
15	000 987 21 41	Rubber plate	1	)

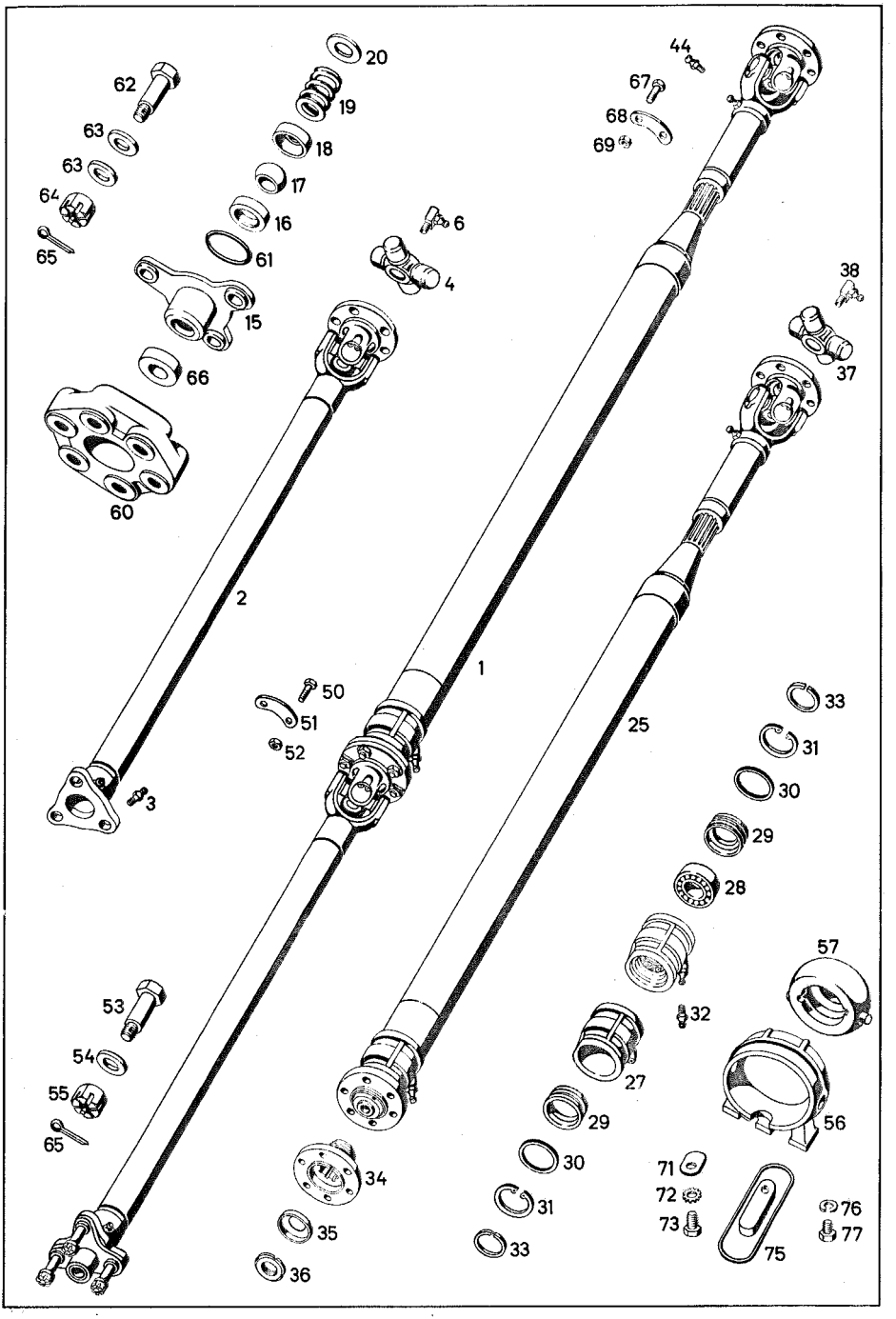
62
63
63
64
65
20
19
18
17
16
61
15
66
60
6
4
44
67
68
69
38
37
2
1
25
50
51
52
3
33
31
30
29
28
57
32
27
56
53
54
55
65
34
35
36
29
30
31
33
71
72
73
75
76
77

Fig. No.	No. of spare part	Denomination	Quantity	Remarks
		PROPELLER SHAFT		
1	121 410 11 03	Propeller shaft, complete with intermediate bearing, without bearing bracket and rubber mounting	1	
2	180 410 11 01	Front propeller shaft with joint	1	
3	-	Grease fitting A 6 DIN 71412	2	
4	180 410 01 31	Universal cross	1	
6	120 997 01 88	Grease fitting	1	
15	186 410 04 30	Centering flange	1	
16	136 411 00 18	Ball socket, interior	1	
17	184 411 00 17	Centering ball	1	
18	136 411 01 18	Ball socket, exterior	1	
19	184 993 04 01	Pressure spring	1	
20	180 411 00 76	Locking plate	1	
25	121 410 22 02	Rear propeller shaft with bearing	1	
27	180 413 01 01	Housing	1	
28	-	Annular grooved bearing 6006 X - C 3 DIN 625	1	
29	180 413 01 51	Spacer ring	2	
30	180 997 03 40	Sealing ring	2	

Fig. No.	No. of spare part	Denomination	Quantity	Remarks
31	-	Circlip 55x2 DIN 472	2	
32	-	Grease fitting A 6 DIN 71412	1	
33	-	Sealingring A 40x3 ac DIN 73102	2	
34	186 411 09 45	Joint flange	1	
35	182 994 00 43	Locking plate	1	
36	186 990 00 60	Grooved nut	1	
37	180 410 01 31	Universal cross	1	
38	120 997 01 88	Grease fitting	1	
44	-	Grease fitting A 6 DIN 71412	1	
50	182 990 00 01	Hex. -hd. screw	6	)
51	186 994 03 25	Locking plate	3	) for front at) rear propeller) shaft
52	-	Hex. nut M 8 DIN 934-5 S	6	)
53	186 411 05 71	Fitted screw	3	)
54	187 990 14 40	Washer	3	) for joint disc) at front pro-) peller shaft
55	-	Castle nut M 12x1,5 DIN 937-5 S	3	)
56	180 410 03 39	Bearing bracket	1	) for propeller) shaft inter-) mediate bearing
57	180 413 01 12	Rubber mounting	1	

10/624

Fig. No.	No. of spare part	Denomination	Quantity	Remarks
60	180 411 06 15	Joint disc	1	
61	180 997 10 40	Sealing ring	1	
62	186 411 01 71	Fitted screw	3	)
63	187 990 14 40	Washer	6	) for joint disc
64	-	Castle nut M 12x1,5 DIN 937-5 S	3	) at transmission
65	-	Cotter pin 3x28 DIN 94	6	)
66	120 411 00 60	Sealing ring (for propeller shaft at transmission)	1	
67	182 990 00 01	Hex.-hd. screw	6	) for propeller
68	186 994 03 25	Locking plate	3	) shaft at rear axle
69	-	Hex. nut M 8 DIN 934-5 S	6	)
71	180 411 02 62	Washer	2	) for intermed.
72	-	Toothed washer A 8,4 DIN 6797	2	) bearing at
73	-	Hex.-hd. screw M 8x18 DIN 933-8 G	2	) frame
75	120 413 05 61	Protective plate for rubber mounting	1	
76	-	Lock washer B 8 DIN 127	1	) for protective
77	-	Hex.-hd. screw M 8x12 DIN 933-8 G	1	) plate at inter- mediate bearing

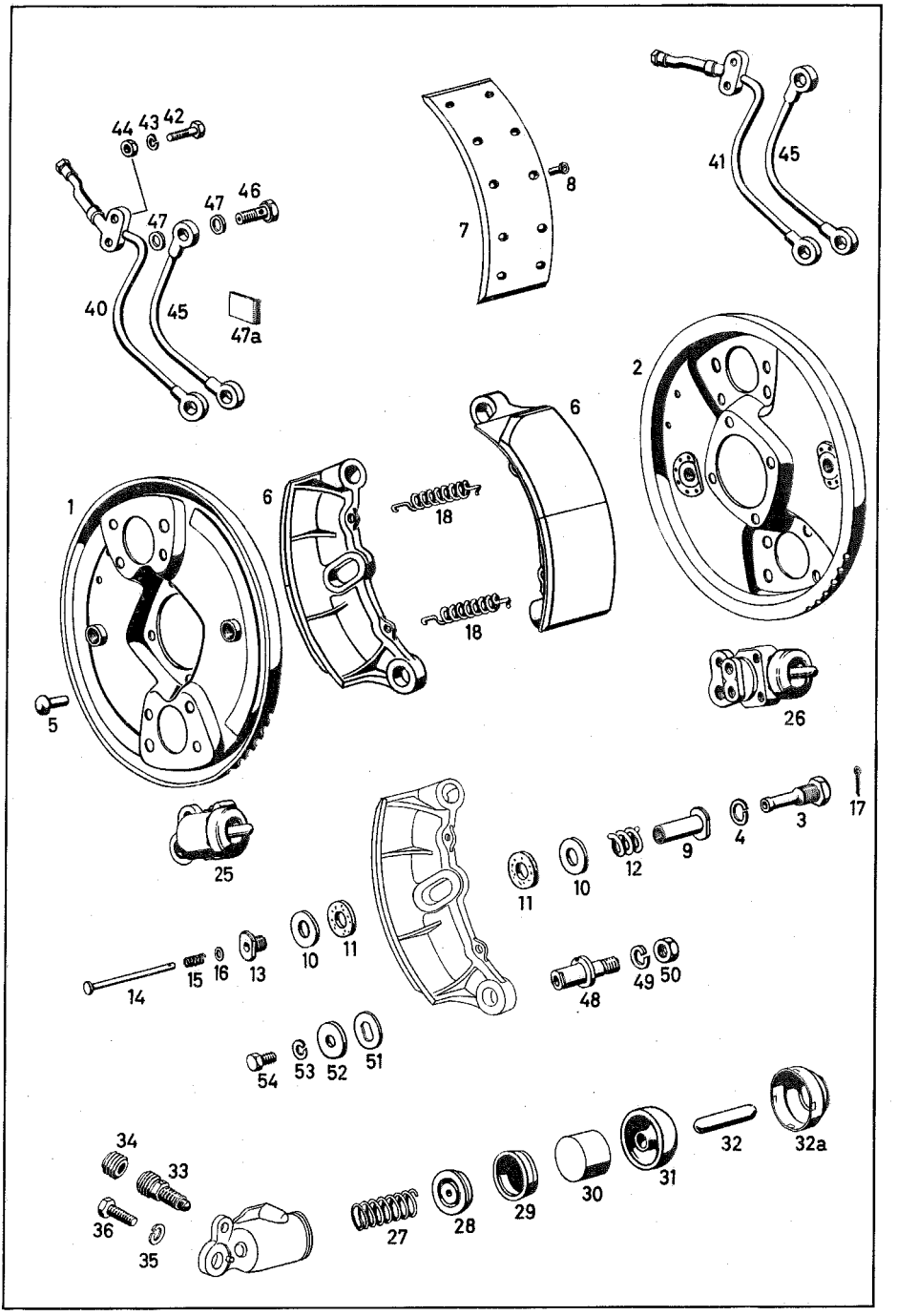
44
43
42
47
46
47
40
45
47a
7
8
41
45
2
6
1
6
18
18
5
26
25
3
17
4
9
12
11
10
11
10
14
15
16
13
48
49
50
54
53
52
51
34
33
36
35
27
28
29
30
31
32
32a

Fig. No.	No. of spare part	Denomination	Quantity	Remarks
		FRONT WHEEL BRAKE		
1	180 420 16 16	Brake anchor plate, left	1	
2	180 420 17 16	Brake anchor plate, right	1	
3	180 421 02 71	Pin (for automatic brake adjustment)	4	
4	-	Lock washer B 14 DIN 127	4	
5	-	Button-hd. rivet 9x20 DIN 660 (for brake anchor plate at steering knuckle)	8	
6	121 420 00 20	Brake shoe with 2 different brake linings	4	
7	180 421 05 10	Brake lining)for replacement	4	
8	183 990 02 95	Tubular rivet)delivery, to rivet unpasted	40	
9	180 421 01 37	Adjusting sleeve	4	)
10	180 990 09 40	Thrust washer)) optional	8	))for automatic
-	180 990 24 40	Thrust washer)	8	)brake adjust-)ment at brake
11	180 421 00 32	Friction washer	8	)shoes)
12	194 993 00 01	Pressure spring	4	))
13	180 421 03 71	Tightening screw	4	))
-	180 990 13 40	Shim	a.r.	))
14	180 421 00 74	Guide pin	4	)

Fig. No.	No. of spare part	Denomination	Quantity	Remarks
15	180 993 23 01	Pressure spring	4	)
16	-	Washer 5, 3 DIN 125	4	)for guide pin)at brake anchor
17	-	Cotter pin 3 x 15 DIN 94	4	)plate)
18	120 993 08 10	Release spring (for brake shoe, front)	4	
		WHEEL BRAKE CYLINDER, FRONT		
25	000 420 72 18	Wheel brake cylinder 28,57Ø=1 1/8" with sheet metal protective cap (for front wheel brake, left)	2	
26	000 420 73 18	Wheel brake cylinder 28,57Ø=1 1/8" with sheet metal protective cap (for front wheel brake, right)	2	
27	000 421 10 90	Stop spring	4	
28	000 421 14 89	Filling piece	4	
29	000 421 05 86	Sealing sleeve	4	
30	000 421 16 83	Piston	4	
31	000 421 10 87	Protective cap	4	
32	000 421 09 88	Pressure pin	4	
32a	000 421 16 87	Sheet metal protective cap	4	
33	000 420 08 55	Bleeder screw	2	
34	000 421 08 87	Rubber cap	2	

Fig. No.	No. of spare part	Denomination	Quantity	Remarks
35	-	Lock washer B 8 DIN 127	12	)for wheel)brake cylinder
36	-	Hex. -hd. screw M 8x15 DIN 933-8 G	12	)at brake anchor)plate
		BRAKE FLUID LINES		
40	180 420 07 29	Brake fluid line, left (from distributor fitting to wheel brake cylinder, left)	1	
41	180 420 08 29	Brake fluid line, right (from distributor fitting to wheel brake cylinder, right)	1	
42	-	Hex. -hd. screw M 7x22 DIN 931-8 G	4	))for brake fluid)line at brake
43	-	Lock washer B 7 DIN 127	4	)anchor plate)
44	-	Hex. nut M 7 DIN 934-5 S	4	)
45	180 420 08 28	Brake fluid line (between the two wheel brake cylinders)	2	
46	000 428 07 26	Hollow screw	6	
47	-	Sealing ring A 10x14 DIN 7603 Cu	12	
47a	180 987 00 37	Rubber pad	2	
48	180 421 03 18	Pin (for brake shoe suspension)	4	))for pin at)brake anchor
49	-	Lock washer B 12 DIN 127	4	)plate

Fig. No.	No. of spare part	Denomination	Quantity	Remarks
50	-	Hex. nut M 12x1, 5 DIN 936-5 S (for pin at brake anchor plate)	4	
51	120 421 02 56	Washer	4	)
-	120 421 03 56	Shim 0.50 mm thick)	a.r.	)
-	120 421 04 56	Shim 0.75 mm thick) optional	a.r.	)
-	120 421 05 56	Shim 0.88 mm thick)	a.r.	) for brake shoes at pin
52	120 990 07 40	Washer	4	)
53	-	Lock washer B 8 DIN 127	4	)
54	-	Hex.-hd. screw M 8x12 DIN 933-8 G	4	)

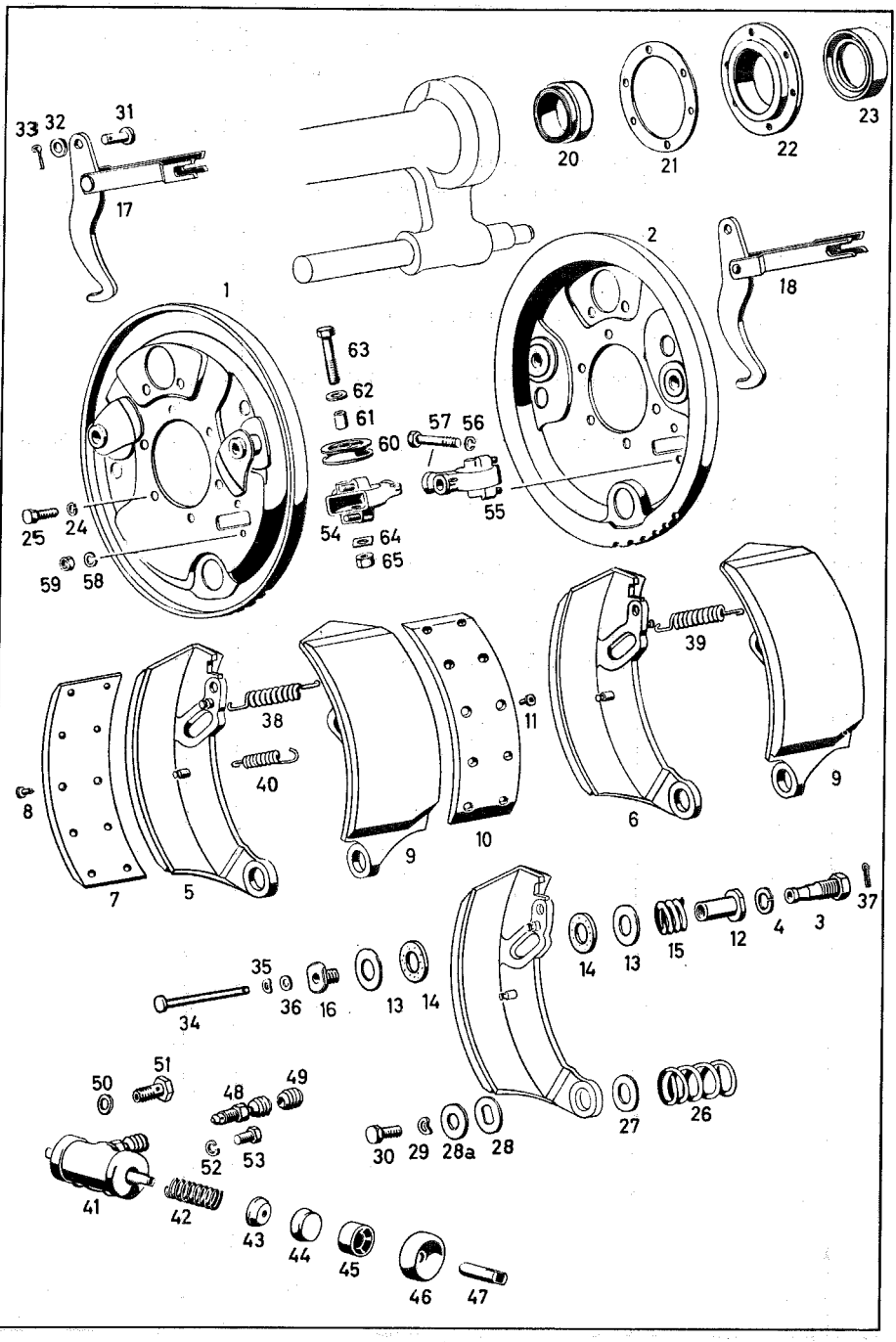
33
32
31
17
20
21
22
23
2
18
1
63
62
61
60
57
56
55
54
64
65
25
24
59
58
39
38
40
11
8
9
10
7
5
6
9
37
35
36
16
13
14
34
14
13
15
12
4
3
50
51
48
49
52
53
41
42
43
44
45
46
47
30
29
28a
28
27
26

Fig. No.	No. of spare part	Denomination	Quantity	Remarks
		REAR WHEEL BRAKE		
1	180 420 12 17	Brake anchor plate, rear, left	1	
2	180 420 13 17	Brake anchor plate, rear, right	1	
3	180 423 02 71	Pin	4	)for automatic
4	-	Lock washer B 14 DIN 127	4	)brake adjustment)at brake anchor)plate
5	121 420 01 20	Brake shoe, front, left with 2 different brake linings	1	
6	121 420 02 20	Brake shoe, front, right with 2 different brake linings	1	
7	180 421 05 10	Brake lining)for replacement	2	
8	183 990 02 95	Tubular rivet)delivery(to rivet, unpasted)	20	
9	121 420 03 20	Brake shoe, rear with 2 different brake linings	2	
10	180 421 05 10	Brake lining)for replacement	2	
11	183 990 02 95	Tubular rivet) delivery (to rivet u npasted)	20	
12	180 423 05 50	Adjusting sleeve	4	)
13	180 990 09 40	Pressure plate)	8	)for automatic)brake adjust-
-	180 990 24 40	) optional Pressure plate)	8	)ment at brake)shoe
14	180 421 00 32	Friction washer	8	))
15	194 993 00 01	Pressure spring	4	)

10/024

Fig. No.	No. of spare part	Denomination	Quantity	Remarks
16	180 421 03 71	Tightening screw	4	for automatic brake adjustment at brake shoe
-	180 990 13 40	Shim	a.r.	
		BRAKE LEVER		
17	180 420 00 42	Brake lever, left	1	
18	180 420 01 42	Brake lever, right	1	
20	000 997 81 47	Sealing ring (in rear axle tube)	2	
21	120 357 01 79	Gasket	2	for brake anchor plate at rear axle tube
22	120 357 00 58	Gasket holder	2	
23	000 997 88 47	Sealing ring	2	
24	-	Lock washer B 7 DIN 127	12	
25	-	Hex.-hd. screw M 7x18 DIN 933-8 G	12	
26	120 993 07 01	Pressure spring	2	
27	120 990 06 40	Washer	2	for brake shoe at supporting tube
28	120 423 01 56	Washer for supporting tube	2	
28a	120 990 07 40	Washer	2	
29	-	Lock washer B 8 DIN 127	2	
30	-	Hex.-hd. screw M 8x15 DIN 933-8 G	2	

Fig. No.	No. of spare part	Denomination	Quantity	Remarks
31	183 423 06 74	Pin	2	)
32	-	Washer 8,4 DIN 125	2	) for brake lever) at brake shoe)
33	-	Cotter pin 3x15 DIN 94	2	)
34	180 423 02 74	Guide pin	4	
35	-	Lock washer 5 N 55 a	4	)
36	-	Washer 5,3 DIN 125	4	)for guide pin)at brake anchor)plate
37	-	Cotter pin 3x15 DIN 94	4	)
38	180 993 11 10	Release spring (for rear wheel brake shoe, left)	1	
39	180 993 12 10	Release spring (for rear wheel brake shoe, right)	1	
40	136 423 00 92	Release spring (for brake lever)	2	
		WHEEL BRAKE CYLINDER, REAR		
41	000 420 50 18	Wheel brake cylinder 25.4 Ø = 1"	2	
42	000 421 09 90	Stop spring	2	
43	000 421 06 89	Filling piece	4	
44	000 421 00 86	Sealing sleeve	4	
45	000 421 00 83	Piston	4	
46	000 421 00 87	Protective cap	4	
47	000 421 04 88	Pressure pin	4	

Fig. No.	No. of spare part	Denomination	Quantity	Remarks
48	000 420 08 55	Bleeder screw M 10 x 1	2	
49	000 421 08 97	Rubber cap	2	
50	-	Sealing ring A 10x14 DIN 7603 Cu	4	
51	000 428 07 26	Hollow screw	2	
52	-	Lock washer B 8 DIN 127	4	)for wheel brake
53	-	Hex.-hd. screw M 8x12 DIN 933-8 G	4	)cylinder at brake)anchor plate
		CABLE ROLLER CASE		
54	180 420 03 90	Cable roller case, left	1	) for brake
55	180 420 04 90	Cable roller case, right	1	) anchor plate)
56	-	Lock washer B 7 DIN 127	2	)for cable roller
57	-	Hex.-hd. screw M 7x50 DIN 931-8 G	2	)case at rear)axle tube
58	-	Lock washer B 6 DIN 127	4	)for cable roller
59	-	Hex. nut M 6 DIN 934-5 S	4	)case at brake)anchor plate
60	120 427 00 42	Cable roller (for hand brake)	2	
61	187 427 01 53	Spacer sleeve	2	)
62	187 427 00 52	Guard plate	4	)
63	-	Hex.-hd. screw M 8x45 DIN 931-8 G	2	) for cable roller) at cable roller) case
64	120 994 00 01	Locking plate	2	)
65	-	Hex. nut M 8 DIN 934-5 S	2	)

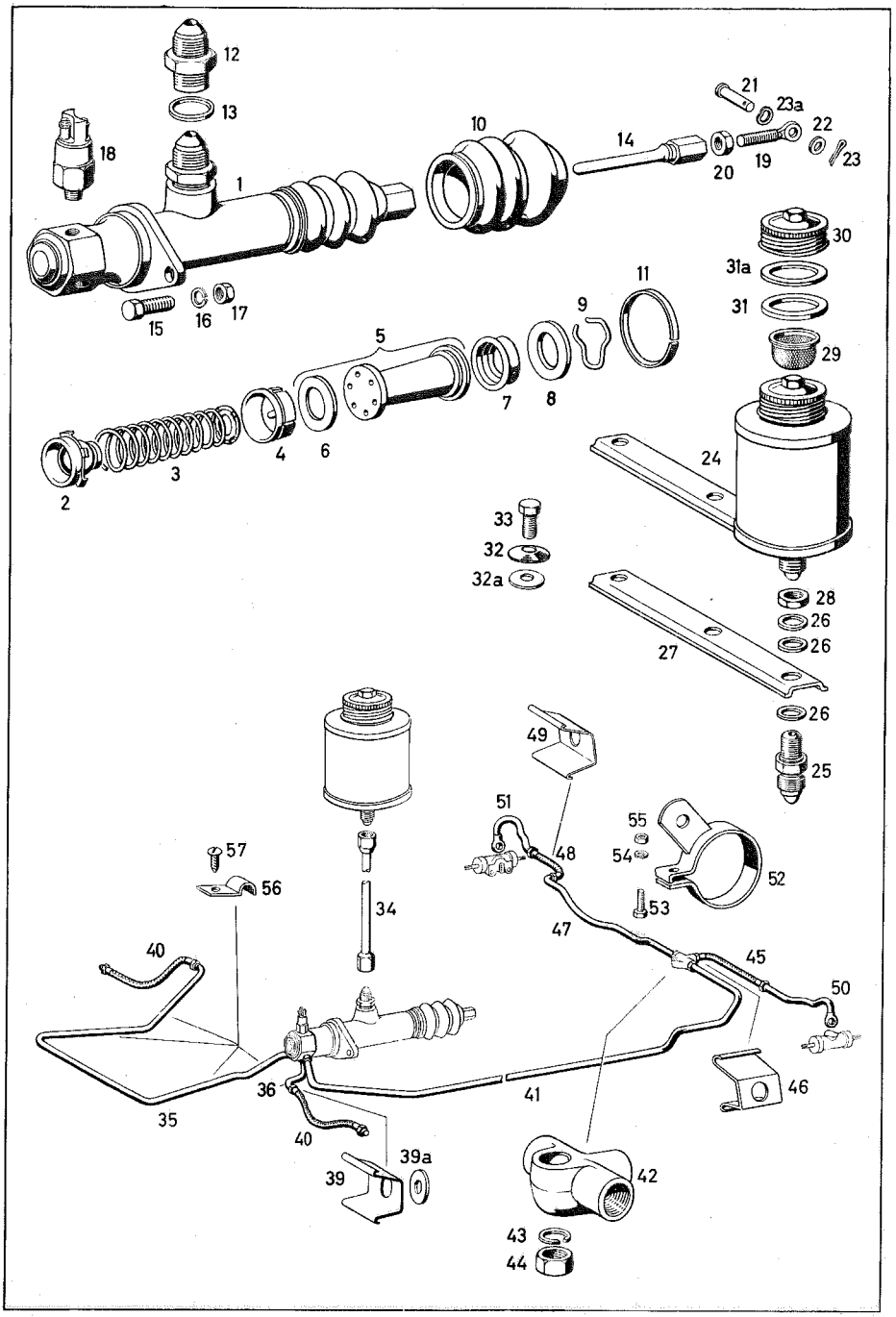
12
13
18
1
10
14
21
23a
22
19
20
23
30
31a
31
29
11
9
5
7
8
15
16
17
4
6
3
2
24
33
32
32a
28
26
26
27
26
25
49
51
48
55
54
52
53
47
57
56
34
40
45
50
36
41
46
35
40
39a
39
42
43
44

Fig. No.	No. of spare part	Denomination	Quantity	Remarks
		MAIN BRAKE CYLINDER		
1	000 430 40 01	Main brake cylinder 25.4 Ø without brake light switch	1	
2	000 430 03 81	Bottom valve	1	
3	000 431 31 93	Pressure spring with spring retainer	1	
4	000 431 15 86	Sleeve	1	
5	000 430 01 83	Piston with filling disc	1	
6	000 431 09 85	Filling disc	1	
7	000 431 34 86	Secondary sleeve	1	
8	000 431 17 76	Stop washer	1	
9	000 994 18 35	Lock washer	1	
10	000 431 26 86	Protective cap	1	
11	000 431 05 91	Sleeve	1	
12	000 431 03 35	Screwed nipple	1	
13	-	Sealing ring A 22x27 DIN 7603 Cu	1	
14	000 431 14 92	Piston rod	1	
15	-	Hex.-hd. screw M 8x22 DIN 933-8 G	2	))for main brake)cylinder at
16	-	Lock washer B 8 DIN 127	2	)bracket, body)
17	-	Hex. nut M 8 DIN 934-5 S	2	)

Fig. No.	No. of spare part	Denomination	Quantity	Remarks
18	000 545 22 09	Brake light switch	1	see also group 54
19	180 292 00 32	Pressure rod	1	
20	-	Hex. nut M 10 DIN 936-5 S (for pressure rod at piston rod)	1	
21	186 991 02 05	Collar pin	1	)
22	-	Washer 10, 5 DIN 433	1	) for pressure rod) at brake pedal
23	-	Cotter pin 3x18 DIN 94	1	)
23a	-	Lock washer 10 N 55 a	a.r.	)
24	180 430 00 02	Compensation tank	1	
25	000 431 01 35	Screwed nipple	1	
26	-	Sealing ring A 14x20 DIN 7603 Cu	3	
27	000 431 02 40	Bracket	1	
28	-	Hex. nut M 14x1, 5 DIN 936-5 S	1	
29	000 431 00 34	Strainer	1	
30	000 431 07 33	Cap	1	
31	000 997 02 40	Sealing ring	1	
31a	000 997 29 40	Sealing ring	1	
32	000 990 01 48	Lock washer	2	)for support,)compensation
32a	-	Washer A 6 DIN 9021	2	)tank at dash-)board cowl

10/024

Fig. No.	No. of spare part	Denomination	Quantity	Remarks
33	-	Hex. -hd. screw M 6x18 DIN 933-8 G (for support compensation tank at dashboard cowl)	2	
		BRAKE FLUID LINES		
34	180 420 03 28	Brake fluid line (from compensation tank to main brake cylinder)	1	
35	120 420 10 29	Brake fluid line (from main brake cylinder to bracket, front wheel, right)	1	
36	120 420 02 28	Brake fluid line (from main brake cylinder to distributor, left, front)	1	
39	000 428 03 73	Brake hose retaining spring	2	
40	000 428 29 35	Brake hose 320 mm long	2	
41	120 420 03 32	Brake fluid line, rear (from main brake cylinder to distributor, rear, left)	1	
42	000 429 05 37	Distributor fitting, rear, left	1	
43	-	Lock washer B 7 DIN 127	1	for distributor at pin
44	-	Hex. nut M 7 DIN 934-5 S	1	
45	000 428 30 35	Brake hose 210 mm long	1	
46	000 428 03 73	Brake hose retaining spring	1	

Fig. No.	No. of spare part	Denomination	Quantity	Remarks
47	180 420 01 37	Brake fluid line (from distributor, rear to bracket, brake hose, right)	1	
48	000 428 31 35	Brake hose 220 mm long	1	
49	000 428 03 73	Brake hose retaining spring	2	
50	180 420 02 30	Brake fluid line, left (for brake anchor plate, left)	1	
51	180 420 01 30	Brake fluid line, right (for brake anchor plate, right)	1	
52	180 420 01 86	Tube clamp with bracket	2	
53	-	Hex. -hd. screw M 6x18 DIN 933-8 G	2	) for tube clamp at rear axle tube
54	-	Lock washer B 6 DIN 127	2	
55	-	Hex. nut M 6 DIN 934-5 S	2	
56	-	Fixing clamp 1x5 DIN 72571	4	) for brake fluid line at forked member, left and right, front
57	-	Lens-hd. screw S 3, 9x9, 5 DIN 7981	4	

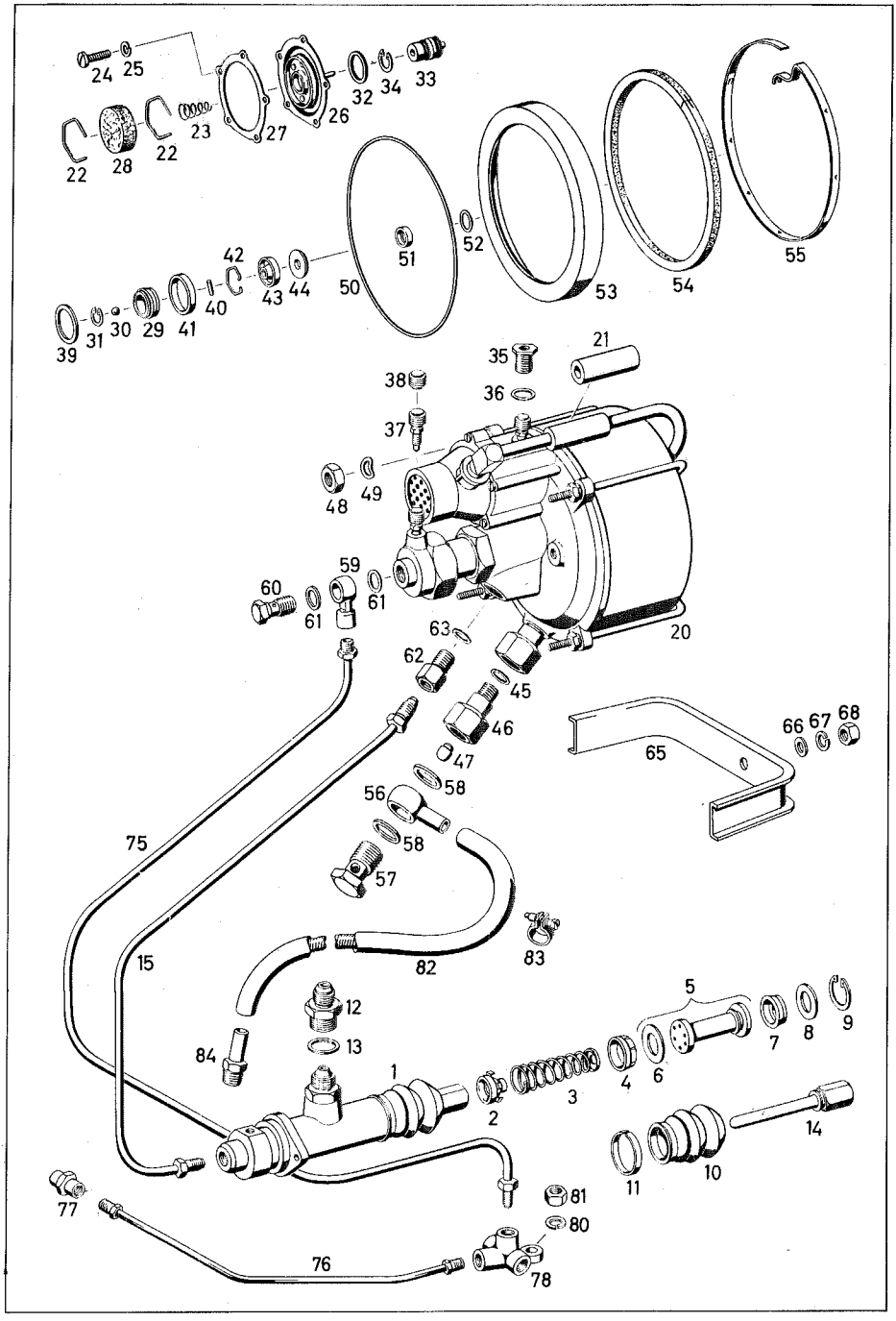
24
25
32
34
33
22
28
22
23
27
26
55
54
53
52
51
50
42
43
44
40
39
31
30
29
41
35
21
38
36
37
48
49
59
60
61
61
63
20
62
45
46
47
56
58
58
57
65
66
67
68
75
15
82
83
12
13
84
1
2
3
4
6
5
7
8
9
14
11
10
81
80
77
76
78

Fig. No.	No. of spare part	Denomination	Quantity	Remarks
		MAIN BRAKE CYLINDER		
1	000 430 49 01	Main brake cylinder 26,99 Ø 1 1/16"	1	
2	000 430 06 81	Floor valve	1	
3	000 431 41 93	Pressure spring with spring retainer	1	
4	000 431 32 86	Sleeve	1	
5	000 430 03 83	Piston with filling disc	1	
6	000 431 14 85	Filling disc	1	
7	000 431 33 86	Secondary sleeve	1	
8	000 431 20 76	Stop washer	1	
9	000 994 07 41	Circlip, lock J 31 x 1, 2	1	
10	000 431 26 86	Protective cap	1	
11	000 431 05 91	Sleeve	1	
12	000 431 03 35	Screwed nipple	1	
13	-	Sealing ring A 22x27 DIN 7603 Cu	1	
14	000 431 14 92	Piston rod	1	
15	121 420 05 26	Brake fluid line (from main brake cylinder to ATE booster brake)	1	
		ATE BOOSTER BRAKE		
20	000 430 12 30	ATE booster brake T 50	1	

Fig. No.	No. of spare part	Denomination	Quantity	Remarks
21	000 435 11 82	Connection hose	1	
22	000 994 20 35	Snap ring	2	
23	000 435 05 84	Pressure spring	1	
24	-	Lens-hd. screw AM 4x15 DIN 85-4 S	1	
25	-	Lock washer B 4 DIN 127	5	
26	000 430 00 68	Diaphragm	1	
27	000 435 06 80	Gasket	1	
28	000 435 03 12	Filter packing	1	
29	000 435 03 86	Grooved sleeve	1	
30	-	Steel ball 7 mm III DIN 5401	1	
31	-	Circlip 16x1 DIN 472	1	
32	000 997 44 46	Sealing ring	1	
33	000 430 02 83	Plunger with sleeve	1	
34	-	Circlip 19x1 DIN 472	1	
35	000 997 12 72	Screwed nipple	1	
36	-	Sealing ring A 14x18 DIN 7603 Cu	1	
37	000 420 07 55	Bleeder screw M 8	2	
38	000 421 08 87	Rubber cap	2	
39	-	Sealing ring A 26x32 DIN 7603 Cu	1	

Fig. No.	No. of spare part	Denomination	Quantity	Remarks
40	-	Cylindr. pin 2, 5 h11x14 DIN 7	1	
41	000 997 45 46	Sealing ring	1	
42	000 994 21 35	Snap ring	1	
43	000 435 04 86	Sleeve	1	
44	000 990 26 40	Washer	1	
45	-	Sealing ring A 14x18 DIN 7603 Cu	1	
46	000 430 08 81	Nonreturn valve	1	
47	000 435 04 80	Valve gasket	1	
48	-	Hex. nut M 8 DIN 934-5 S	4	
49	-	Lock washer A 8 DIN 137	4	
50	000 435 05 80	Ring	1	
51	000 997 46 47	Oil seal	1	
52	000 997 47 46	Sealing ring	1	
53	000 435 05 86	Leather sleeve	1	
54	000 997 34 40	Felt ring	1	
55	000 435 02 83	Ring	1	
56	000 990 02 88	Annular nipple	1	)
57	000 428 01 26	Hollow screw M 22 x 1, 5	1	) for under-
58	-	Sealing ring A 22x27 DIN 7603 fiber	2	) pressure line) connection)

Fig. No.	No. of spare part	Denomination	Quantity	Remarks
59	000 428 07 30	Annular nipple	1	)
60	000 428 00 26	Hollow screw M 14 x 1, 5	1	) for brake oil
61	-	Sealing ring A 14x18 DIN 7603 Cu	2	) line connection)
62	000 423 01 84	Screwed nipple M 14 x 1, 5	1	
63	-	Sealing ring A 14x18 DIN 7603 Cu	1	
65	180 435 11 40	Fixing clamp	1	)
66	-	Washer 8, 4 DIN 125	1	) for ATE booster
67	-	Lock washer B 8 DIN 127	1	) brake at) bracket
68	-	Hex. nut M 8 DIN 934-5 S	1	)
75	121 420 06 26	Brake fluid line (from ATE booster brake to distributor)	1	
76	121 420 04 26	Brake fluid line (from distributor, wheel brake cylinder to front wheel, right)	1	
77	121 429 01 34	Coupling piece	1	
78	000 428 00 37	Distributor	1	
80	-	Lock washer B 8 DIN 127	1	) f. distributor,
81	-	Hex. nut M 8 DIN 934-5 S	1	) wheel brake cyl.) at fixing pan at) wheel arch
82	000 435 15 82	Connection hose with supporting spring 11, 5x17x540 mm long (from engine to ATE booster brake)	1	state length when ordering
83	-	Hose clamp S 17/9 N 288 a	2	
84	180 429 00 41	Screwed nipple (connecting fitting at engine and suction pipe)	1	

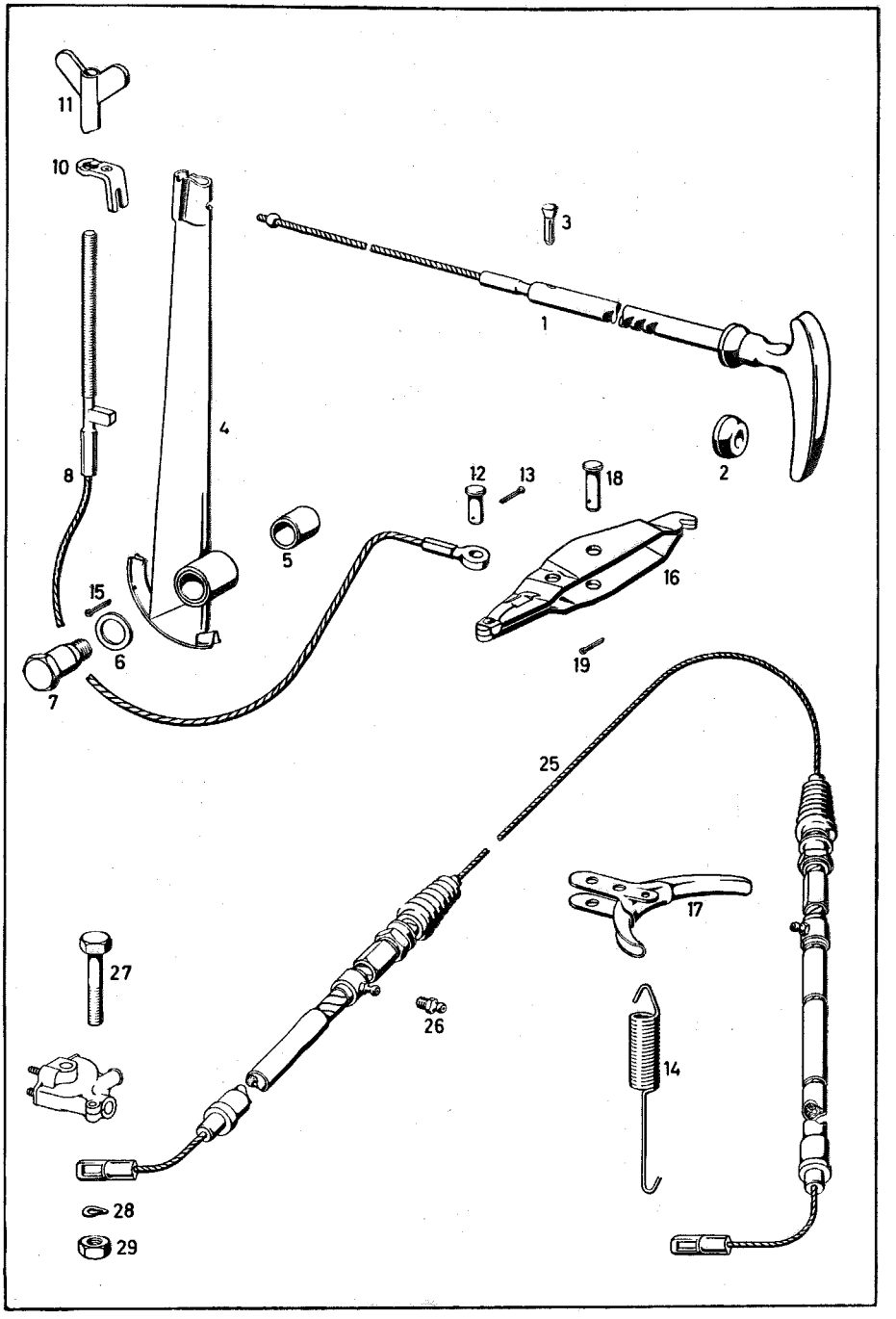
11
10
3
1
4
8
2
12
13
18
5
16
15
6
19
7
25
17
27
26
14
28
29

Fig. No.	No. of spare part	Denomination	Quantity	Remarks
		PISTOL-GRIP HAND BRAKE		
1	120 420 17 88	Pawl rod, complete	1	
2	120 427 00 86	Stop ring	1	
3	120 991 00 61	Guide pin (for pawl rod in guide tube)	1	
4	120 420 10 12	Brake lever, complete with bushing	1	
5	120 427 04 50	Bushing	1	
6	187 990 08 40	Washer	1	)for brake lever)at pin,
7	120 427 03 74	Pin	1	)body
8	120 420 04 85	Centre brake cable	1	
10	120 420 04 86	Bracket	1	
11	187 427 00 19	Wing nut (for hand brake adjustment)	1	
12	-	Pin 8 f8x18x15 DIN 1434-5 S	1	)for centre brake)cable at com-
13	-	Cotter pin 2 x 12 DIN 94	1	)pensating lever
14	180 993 14 10	Release spring (for compensating lever)	1	
15	-	Cotter pin 1, 5x12 DIN 94 (for locking centre brake cable in rope guide)	1	
16	120 420 [illegible] 91	Compensating lever for hand brake	1	

Fig. No.	No. of spare part	Denomination	Quantity	Remarks
17	180 420 06 90	Brake cable guide	1	
18	-	Pin with head 8 f8x25x20 DIN 1434-5 D	1	for brake cable guide at compensating lever
19	-	Cotter pin 2x12 DIN 94	1	
-	180 420 08 85	Rear brake cable)) optional	1	
25	180 420 06 85	Rear brake cable)	1	
26	-	Pressuregrease fitting A 10 DIN 71412	2	
27	-	Hex.-hd. screw M 6x30 DIN 931-8 G	2	for brake cable at cable roller case
28	-	Lock washer B 6 DIN 137	2	
29	-	Hex. nut M 6 DIN 934-5 S	2	

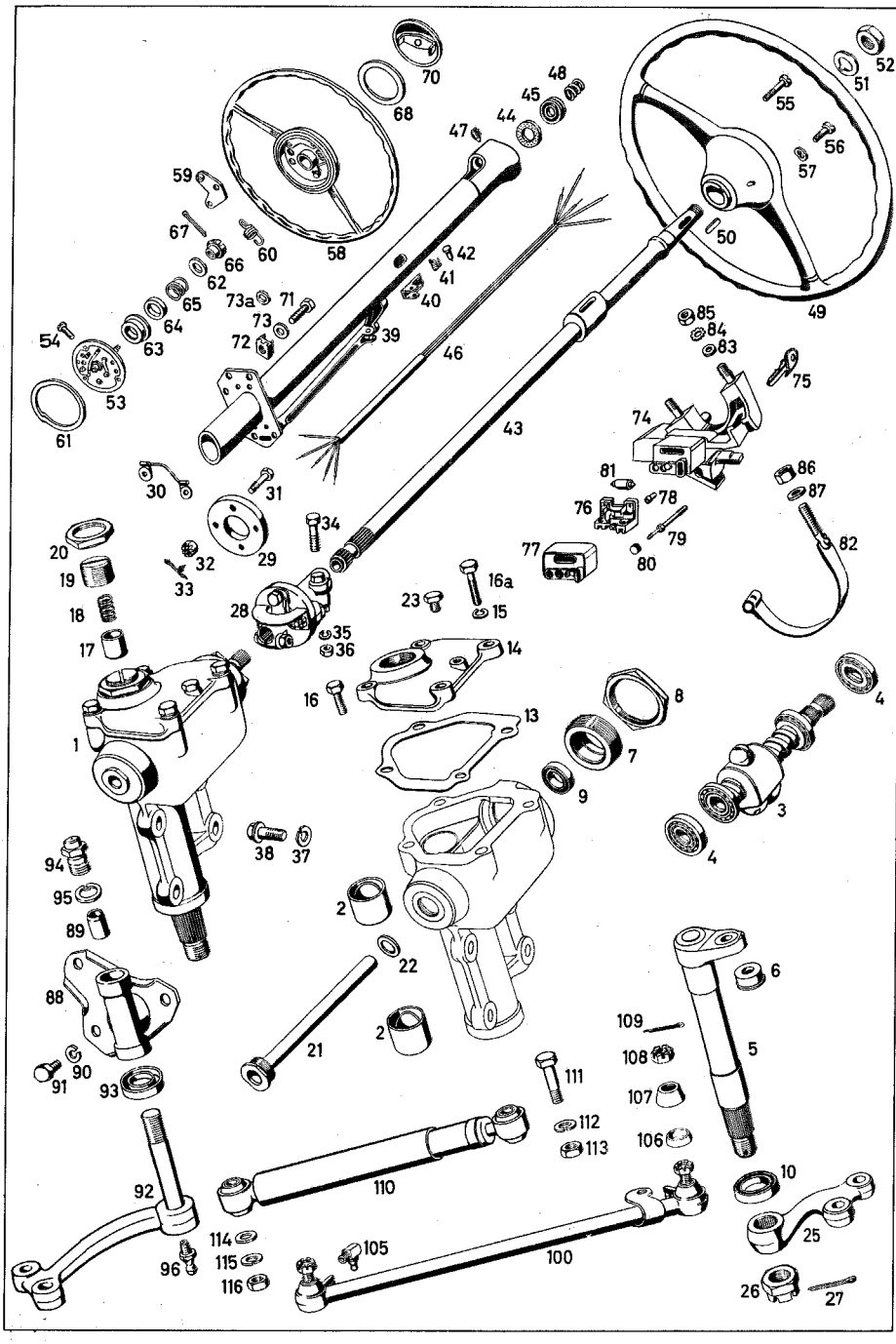
70
68
58
59
67
66
60
62
65
64
63
54
53
61
73a
71
73
72
39
47
48
45
44
42
41
40
46
43
30
31
29
34
32
33
20
19
18
17
28
35
36
23
16a
15
16
14
13
8
7
9
4
3
4
1
38
37
94
95
89
88
91
90
93
2
22
21
2
92
96
114
115
116
110
105
100
111
112
113
109
108
107
106
5
6
10
25
26
27
50
49
52
51
55
56
57
85
84
83
75
74
81
76
78
79
77
80
86
87
82

Fig. No.	No. of spare part	Denomination	Quantity	Remarks
		STEERING		
1	120 460 31 01	Steering without pitman arm	1	
2	120 462 05 50	Bushing, top and bottom	2	
3	120 460 16 08	Steering worm with nut and tapered roller bearing	1	
4	000 981 03 18	Tapered roller bearing	2	
5	186 460 01 11	Steering shaft with ball socket	1	
6	120 462 01 37	Ball socket	1	
7	120 461 04 06	Adjusting ring	1	
8	120 990 05 51	Hex. nut (for arresting adjusting ring)	1	
9	-	Sealing ring B 20 x 32 x 7 DIN 6504 (in adjusting ring)	1	
10	000 997 48 46	Sealing ring (for steering shaft at steering housing, bottom)	1	
13	120 461 05 80	Gasket (for housing cover at steering housing)	1	
14	186 461 07 05	Steering housing cover	1	
15	-	Lock washer B 8 DIN 127 (for steering housing cover at steering housing)	4	

Fig. No.	No. of spare part	Denomination	Quantity	Remarks
16	-	Hex.-hd. screw M 8x20 DIN 933-8 G	2	))for steering) housing cover
16a	-	Hex.-hd. screw M 8x25 DIN 933-8 G	2	) at steering) housing
17	120 462 01 85	Pressure sleeve	1	
18	120 993 24 01	Pressure spring	1	
19	120 461 01 08	Pressure screw	1	
20	120 990 04 51	Hex. nut	1	
21	186 460 05 15	Cable tube	1	
22	120 997 11 40	Sealing ring (at cable tube, top)	1	
23	-	Screw plug AM 10x1 DIN 7604 (for locking steering housing cover after adjustment of front wheels)	1	
		PITMAN ARM		
25	120 463 05 01	Pitman arm	1	
26	-	Castle nut M 22x1,5 DIN 937-5 S	1	) for pitman arm) at steering
27	-	Cotter pin 5x40 DIN 94	1	)
		STEERING COUPLING		
28	120 460 08 10	Steering coupling with ground connection	1	

Fig. No.	No. of spare part	Denomination	Quantity	Remarks
29	183 462 00 46	Joint disc	1	
30	153 540 00 42	Ground connection	1	
31	-	Hex. -hd. screw M 8x28 S DIN 931-8 G	4	for joint disc at flange
32	-	Castle nut M 8 DIN 937-5 S	4	
33	-	Cotter pin 2x18 DIN 94	4	
34	-	Hex. -hd. screw M 8x35 DIN 931-8 G	2	for steering coupling at steering and steering column jacket
35	-	Lock washer B 8 DIN 127	2	
36	-	Hex. nut M 8 DIN 934-5 S	2	
37	-	Lock washer B 10 DIN 127	3	for steering at front axle support
38	-	Hex. -hd. collar screw M 10x28 N 170 a - 8 G	3	
39	180 460 31 16	Jacket	1	
40	120 427 01 15	Pawl	1	
41	120 993 00 20	Reverse spring	1	
42	-	Rivet pin A 6 h11x20 DIN 7341	1	
43	120 460 40 09	Steering column jacket	1	
44	120 462 01 60	Sealing ring (for support, top)	1	
45	-	Annular grooved bearing 6004 X DIN 625	1	

Fig. No.	No. of spare part	Denomination	Quantity	Remarks
46	180 540 00 09	Cable set	1	
47	120 990 00 77	Threaded pin (for jacket)	1	
48	120 993 08 01	Pressure spring (for steering column, top)	1	
		STEERING WHEEL		
49	120 464 04 01	Steering wheel, black) optional	1	
-	120 464 06 01	Steering wheel, black)	1	
50	-	Key A 6 x 4 x 20 DIN 6885	1	)
51	120 994 03 12	Locking plate	1	) for steering) wheel at
52	-	Hex. nut M 18x1,5 DIN 936-5 S	1	) steering column)
53	120 460 02 45	Contact plate	1	
54	181 464 00 71	Clamping screw	5	
55	-	Cylindr. screw AM 4x25 DIN 84-5 S	1	
56	-	Cylindr. screw AM 4x15 DIN 84-5 S	2	
57	-	Lock washer 4 N 55 a	2	
58	186 460 03 40	Signal ring	1	
59	181 460 04 46	Stop lever	1	
60	181 464 00 90	Release spring	1	

Fig. No.	No. of spare part	Denomination	Quantity	Remarks
61	182 464 00 62	Washer	1	
62	181 464 00 28	Contact washer	1	
63	181 464 01 86	Contact plate	1	
64	153 464 00 23	Insulating plate	1	
65	186 993 37 01	Pressure spring	1	
66	153 464 00 72	Adjusting nut	1	
67	-	Cotter pin 1x18 DIN 94	1	
68	183 997 05 40	Rubber plate	1	
70	187 460 01 44	Manufacturer's mark (at steering wheel)	1	
71	-	Hex.-hd. screw M 6x15 DIN 933-8 G	6	)))
72	000 990 27 91	Square-hd. locking nut M 6	6	) for jacket at) dashboard
73	-	Washer A 6 DIN 9021	4	))
73a	120 545 01 76	Washer	2	)
74	120 460 08 37	Steering column bracket, compl. with lock	1	
75	000 462 00 32	Key	1	state number stamped into key when ordering

Fig. No.	No. of spare part	Denomination	Quantity	Remarks
76	000 462 02 93	Ignition breaker	1	
77	000 462 03 23	Contact cap	1	
78	000 462 01 75	Pin, contact lifting	1	
79	000 462 02 70	Pin	1	
80	000 462 00 72	Nut	1	
81	-	Bulb M 12 V 3 W DIN 72601	1	
82	120 460 02 65	Tightening strap (for steering column bracket)	1	
83	-	Washer 8,4 DIN 433	2	for steering column bracket at instrument panel
84	-	Toothed washer A 8,4 DIN 6797	2	
85	-	Hex. nut M 8 DIN 936-5 S	2	
86	-	Hex. nut M 8 DIN 936-5 S	2	for steering column bracket at jacket
87	-	Washer 8,4 DIN 125	1	
88	120 460 18 38	Pivot pin with bushing (for steering intermediate lever)	1	
89	120 463 02 50	Bushing	1	
90	-	Lock washer B 10 DIN 127	3	for pivot pin at front axle support
91	-	Hex.-hd. screw M 10x15 DIN 933-8 G	3	
92	120 460 10 19	Steering intermediate lever	1	

Fig. No.	No. of spare part	Denomination	Quantity	Remarks
93	-	Sealing ring A 18x30x7 DIN 6503	1	for steering intermediate lever at pivot pin
94	120 463 02 33	Cover	1	
95	181 994 00 10	Locking plate	1	
96	-	Grease fitting A 8 DIN 71412	1	
100	121 460 09 05	Steering rod	1	
105	120 997 00 88	Grease fitting	2	
106	120 338 00 57	Sealing cover	2	for drag link at pitman arm and steering intermediate lever
107	120 338 01 97	Boot	2	
108	120 990 01 55	Castle nut	2	
109	-	Cotter pin 2x25 DIN 94	2	
		STEERING SHOCK ABSORBER		
110	000 463 15 32	Steering shock absorber	1	
111	120 990 12 01	Hex.-hd. screw	1	for steering shock absorber at drag link
112	-	Lock washer B 10 DIN 127	1	
113	-	Hex. nut M 10x1 DIN 936-5 S	1	
114	120 990 09 40	Washer	1	for steering shock absorber at side member half
115	-	Lock washer B 10 DIN 127	1	
116	-	Hex. nut M 10x1 DIN 936-5 S	1	

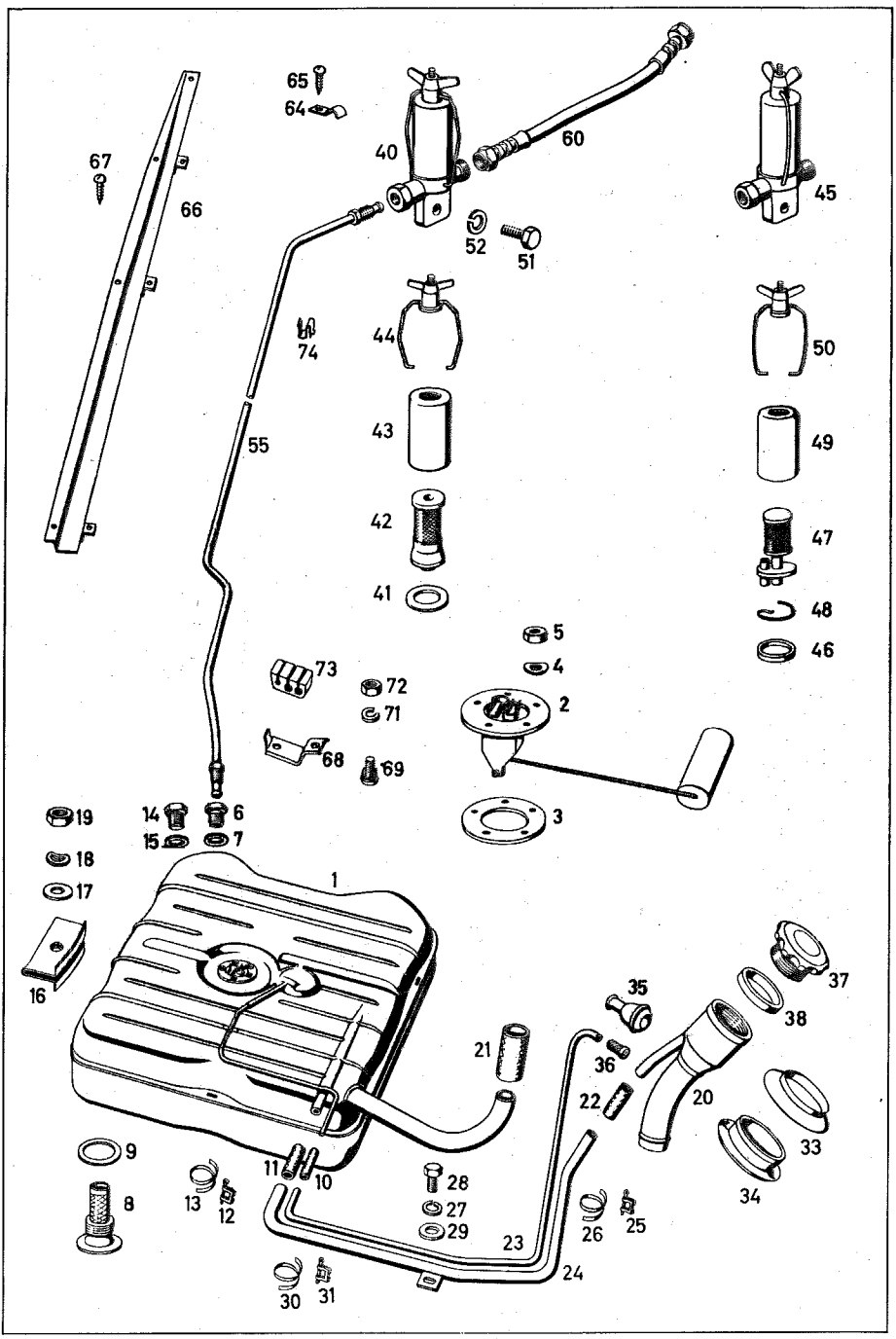
65
64
67
66
40
60
45
52
51
74
44
50
43
49
55
42
47
41
48
46
5
4
73
72
71
2
68
69
3
19
14
6
15
7
18
17
1
16
35
37
38
21
36
22
20
33
9
34
11
10
28
8
13
12
27
29
26
25
23
24
30
31

Fig. No.	No. of spare part	Denomination	Quantity	Remarks
		FUEL TANK		
1	120 470 20 01	Fuel tank (approx. 56 ltrs.)	1	
2	120 542 05 04	Special transmitter with contact connection for reserve indication	1	
3	186 471 01 80	Gasket	1	)
4	-	Lock washer B 5 DIN 137	5	)for filling)apparatus at
5	-	Hex. nut M 5 DIN 934-5 S	5	)fuel tank)
6	120 471 04 20	Intermediate fitting	1	)
7	-	Sealing ring A 20x26 DIN 7603 A1	1	)for fuel line)connection)
8	120 470 01 86	Screw plug (for fuel tank, bottom)	1	
9	-	Sealing ring A 26x34 DIN 7603 A1	1	
10	120 997 13 82	Rubber hose (for venting line)	1	
11	120 997 11 82	Rubber hose (for bleeding line)	1	
12	-	Hose clamp WSN 5 N 262	1	
13	-	Hose strap 5x0,35x200 lg. N 263	1	state length when ordering
14	120 997 01 30	Screw plug	1	) for locking
15	-	Sealing ring A 20x26 DIN 7603 A1	1	) return flow) line connection)

10/024

Fig. No.	No. of spare part	Denomination	Quantity	Remarks
16	120 471 00 22	Reinforcement plate	3	)
17	-	Washer 8,4 DIN 125	3	) for fuel tank
18	-	Lock washer B 8 DIN 137	3	) mounting
19	-	Hex. nut M 8 DIN 934-5 S	3	)
20	120 470 01 21	Elongation (for fuel filling nipple)	1	
21	120 997 00 82	Rubber hose	1	
-	-	Hose clamp WSN 9 N 262	2	) for elongation
-	-	Hose strap 9x0,4x350 lg. N 263 (state length when ordering)	2	) at fuel filling nipple
22	184 476 00 26	Rubber hose	1	)
-	-	Hose clamp WSN 5 N 262	2	) for bleeding line at elonga-
-	-	Hose strap 5x0,35x200 lg. N 263 (state length when ordering)	1	) tion of filling nipple
23	120 471 23 15	Venting line	1	
24	120 470 03 25	Bleeding line	1	
25	-	Hose clamp WSN 5 N 262	1	) for bleeding
26	-	Hose strap 5x0,35x200 lg. N 263 (state length when ordering)	1	) line at fuel hose
27	-	Lock washer B 5 DIN 127	1	) for bleeding
28	-	Hex.-hd. screw M 5x10 DIN 933-8 G	1	) line at bottom, rear

Fig. No.	No. of spare part	Denomination	Quantity	Remarks
29	-	Washer 5,3 DIN 125 (for bleeding line at bottom, rear)	1	
30	-	Hose clamp WSN 5 N 262	1	for venting line at bleeding line
31	-	Hose strap 5x0,35x200 lg. N 263 (state length when ordering)	1	
33	120 471 03 81	Sleeve, upper part	1	for fuel tank filling elongation through rear mudguard
34	120 471 04 81	Sleeve, lower part	1	
35	120 471 02 81	Sleeve	1	
36	120 471 06 35	Strainer (in sleeve for venting tube)	1	
-	-	Hose clamp WSN 5 N 262	1	for venting line at recess, rear mudguard
-	-	Hose strap 5x0,35x110 lg. N 263 (state length when ordering)	1	
37	136 501 00 54	Screwed cover (for fuel filling nipple)	1	
38	191 997 00 40	Sealing ring (for screwed cover)	1	
		FUEL FILTER		
40	000 477 55 01	Fuel filter	1	optional with 000 477 56 01
41	000 477 19 80	Gasket	1	
42	000 477 37 15	Filter element	1	

10/924

Fig. No.	No. of spare part	Denomination	Quantity	Remarks
43	000 477 02 16	Filter bowl	1	
44	000 477 03 18	Wire clamp	1	
45	000 477 56 01	Fuel filter	1	optional with 00 477 55 01
46	000 477 16 80	Gasket	1	
47	000 477 36 15	Filter element	1	
48	000 994 04 37	Locking ring	1	
49	000 477 07 16	Filter bowl	1	
50	000 477 09 18	Wire clamp	1	
51	-	Hex.-hd. screw M 7x18 DIN 933-8 G	1	) for fuel filter at frame
52	-	Lock washer B 7 DIN 127	1	)
		FUEL LINE		
55	120 470 00 70	Fuel line (from fuel tank to filter)	1	
60	136 476 00 26	Flexible hose (from bracket, frame to fuel pump)	1	
64	-	Fixing clamp 1x6 DIN 72571	2	) for fuel line at forked member
65	-	Lens-hd. screw S 4,2x9,5 DIN 7981	2	)
66	120 476 07 46	Protective and fixing rail (for fuel and brake fluid line)	1	

Fig. No.	No. of spare part	Denomination	Quantity	Remarks
67	-	Lens-hd. screw S 4, 2x9, 5 DIN 7981 (for protective rail, body floor)	6	
68	180 995 00 22	Fixing clamp (for fuel and brake fluid line at bottom)	4	
69	120 420 02 27	Screw with locking plate	4	))for fixing
71	-	Lock washer B 6 DIN 127	4	)clamp at)bottom
72	-	Hex. nut M 6 DIN 934-5 S	4	)
73	120 476 01 84	Rubber pad (for fuel and brake fluid line)	7	
74	000 988 49 78	Spring clamp (for fuel line at angle, wheel arch)	2	

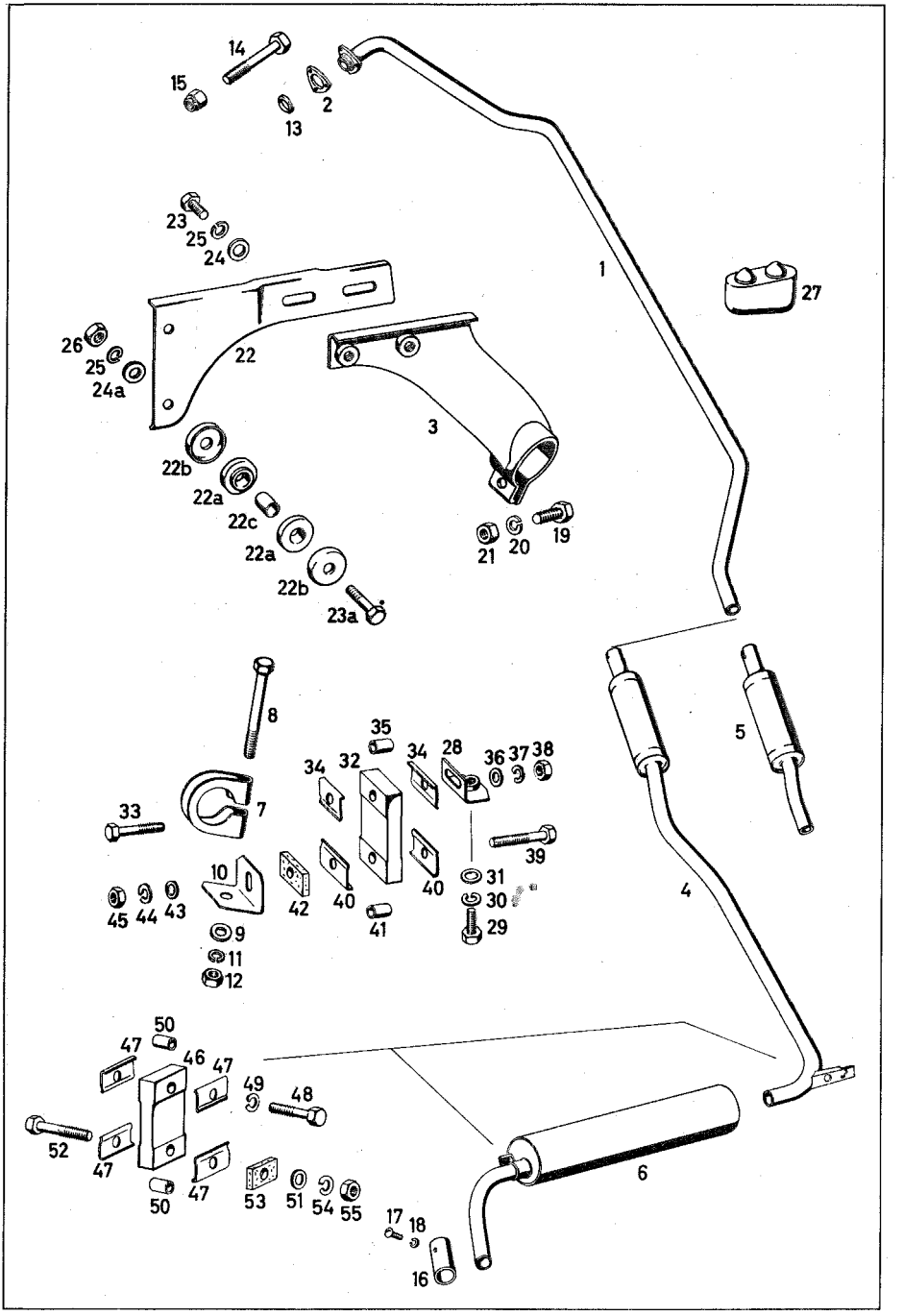
14
15
2
13
23
25
24
1
27
26
25
24a
22
3
22b
22a
22c
22a
22b
23a
21
20
19
8
35
34
32
34
28
36
37
38
33
7
39
10
42
40
40
31
30
29
45
44
43
9
11
12
41
4
5
50
47
46
47
49
48
52
47
50
47
53
51
54
55
6
17
18
16

Fig. No.	No. of spare part	Denomination	Quantity	Remarks
		EXHAUST SYSTEM		
1	121 490 04 20	Exhaust tube, front	1	
2	181 492 00 11	Flange	1	
3	121 490 08 35	Bracket, complete (for front exhaust tube)	1	
4	121 490 08 15	Exhaust line, rear (without rear muffler)	1	
5	121 491 05 01	Front muffler	1	
6	180 491 02 01	Rear muffler)) optional	1	
-	121 491 03 01	Rear muffler)	1	
7	120 491 02 40	Tube clamp	1	))
8	-	Hex. -hd. screw M 8x80 DIN 931-8 G	1	))) for centre
9	-	Washer 8, 4 DIN 125	1	) exhaust) suspension
10	180 492 00 17	Fixing angle	1	))
11	-	Lock washer B 8 DIN 127	1	))
12	-	Hex. nut M 8 DIN 934-5 S	1	)
13	121 492 01 80	Sealing ring	1	))
14	-	Hex. -hd. screw M 8x55 DIN 931-8 G	3	) for front ex-) haust tube at) exhaust mani-) fold
15	-	Hex. nut M 8 AGGN 14441	3	)

10/924

Fig. No.	No. of spare part	Denomination	Quantity	Remarks
16	121 492 01 14	Exhaust jacket	1	
17	-	Button-hd. screw Z 3, 5x6, 5 DIN 7974	2	for jacket at rear exhaust tube
18	-	Lock washer B 3, 5 DIN 127	2	
19	-	Hex.-hd. screw M 8x20 DIN 933-8 G	1	for tube clamp with bracket at front exhaust tube
20	-	Lock washer B 8 DIN 127	1	
21	-	Hex. nut M 8 DIN 934-5 S	1	
22	180 492 04 16	Support	1	
22a	136 155 00 81	Rubber plate	4	
22b	136 155 00 82	Washer	4	
22c	121 492 00 53	Sleeve	2	
23	-	Hex.-hd. screw M 8x20 DIN 933-8 G	2	for support at bracket resp. fixing plate
23a	-	Hex.-hd. screw M 8x40 DIN 931-8 G	2	
24	-	Washer 8, 4 DIN 125 without bevel	2	
24a	-	Washer A 8 DIN 9021	2	
25	-	Lock washer B 8 DIN 127	4	
26	-	Hex. nut M 8 DIN 934-5 S	2	
27	120 987 00 39	Rubber buffer (at body floor, bottom)	1	

Fig. No.	No. of spare part	Denomination	Quantity	Remarks
28	120 490 00 40	Fixing angle (for exhaust suspension, center)	1	
29	-	Hex.-hd. screw M 8x20 DIN 933-8 G	1	for fixing angle at frame support
30	-	Lock washer B 8 DIN 127	1	
31	-	Washer 8,4 DIN 125 without bevel	1	
32	120 492 04 82	Rubber damping plate	1	
33	-	Hex.-hd. screw M 8x45 DIN 931-8 G	1	for damping plate at fixing angle
34	120 492 01 18	Clamping plate	2	
35	120 991 11 40	Spacer tube	1	
36	-	Washer 8,4 DIN 125	1	
37	-	Lock washer B 8 DIN 127	1	
38	-	Hex. nut M 8 DIN 934-5 S	1	
39	-	Hex.-hd. screw M 8x50 DIN 931-8 G	1	for damping plate at braket
40	120 492 01 18	Clamping plate	2	
41	120 991 11 40	Spacer tube	1	
42	120 492 00 83	Insulating washer	1	
43	-	Washer 8,4 DIN 125 without bevel	1	
44	-	Lock washer B 8 DIN 127	1	

Fig. No.	No. of spare part	Denomination	Quantity	Remarks
45	-	Hex. nut M 8 DIN 934-5 S (for damping plate at bracket)	1	
46	120 492 04 82	Rubber damping plate	2	)
47	120 492 01 18	Clamping plate	8	) for exhaust suspension, rear
48	-	Hex.-hd. screw M 8x40 DIN 931-8 G	2	)
49	-	Lock washer B 8 DIN 127	2	)
50	120 991 11 40	Spacer tube	4	
51	-	Washer 8,4 DIN 125 without bevel	2	
52	-	Hex.-hd. screw M 8x50 DIN 931-8 G	2	
53	120 492 00 83	Insulating washer	2	
54	-	Lock washer B 8 DIN 127	2	
55	-	Hex. nut M 8 DIN 934-5 S	2	

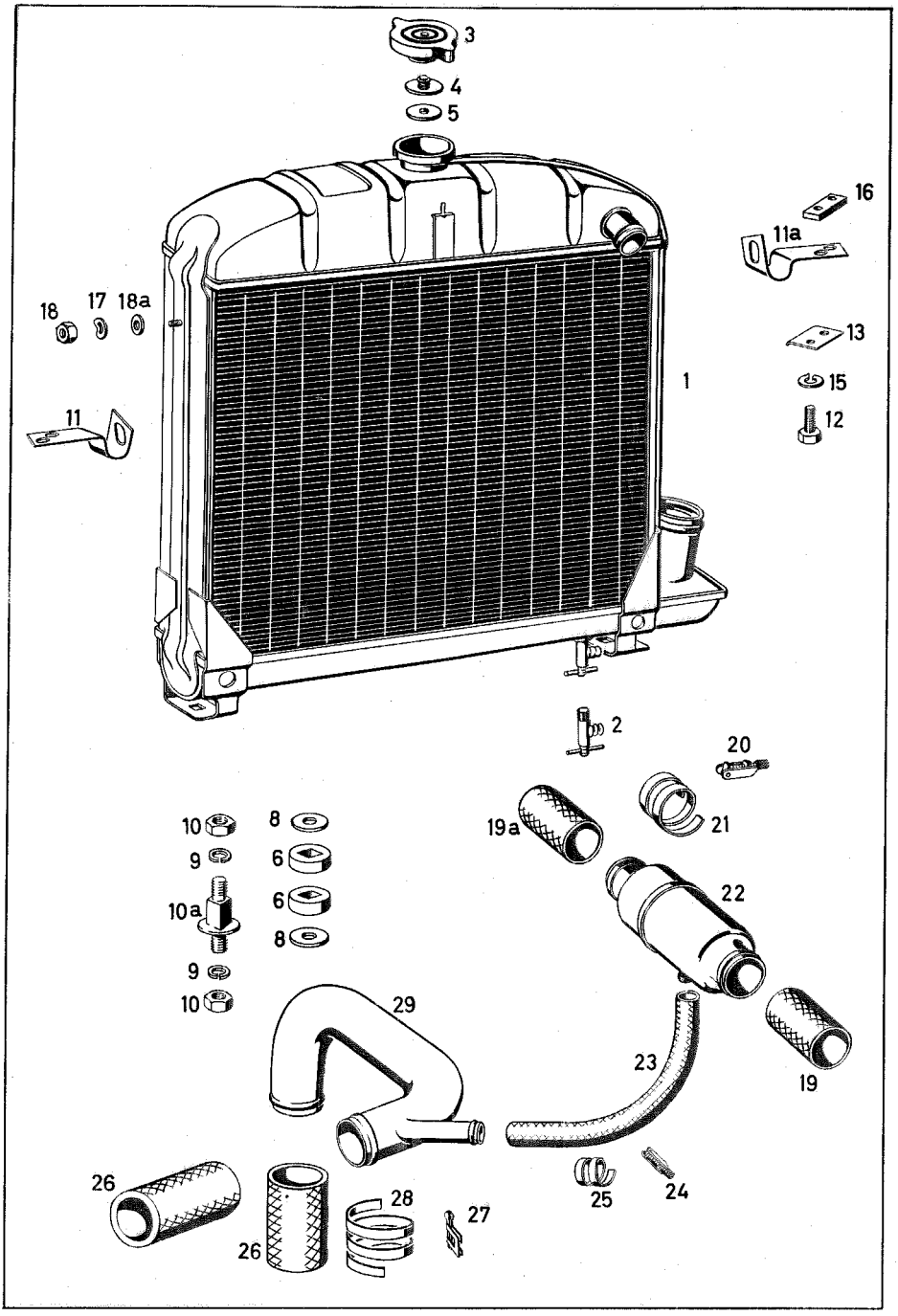
3
4
5
16
11a
18
17
18a
13
1
15
11
12
2
20
10
8
19a
21
9
6
22
10a
6
8
9
10
29
23
19
26
28
27
25
24
26

Fig. No.	No. of spare part	Denomination	Quantity	Remarks
		RADIATOR		
1	121 500 03 03	Radiator	1	
2	-	Drain valve CM 14x1, 5 K DIN 71401	1	
3	186 501 01 15	Radiator cover 1 atü with pressure relief valve	1	
4	000 500 05 40	Plate-type valve	1	
5	000 501 01 81	Gasket	1	
		RADIATOR MOUNTING		
6	120 504 01 82	Rubber plate	4	
8	-	Washer A 8 DIN 9021	4	
9	-	Lock washer B 8 DIN 127	4	
10	-	Hex. nut M 8 DIN 934-5 S	4	
10a	120 500 00 85	Fixing screw (for radiator mounting at radiator support, bottom)	2	
11	121 504 02 40	Leaf spring (for radiator mounting, left, top)	1	
11a	121 504 03 40	Leaf spring (for radiator mounting, right, top)	1	
12	-	Hex.-hd. screw M 6x12 DIN 933-8 G	4	)for leaf spring)at bracket for)body cross re-
13	120 504 00 84	Shim	2	)inforcement

Fig. No.	No. of spare part	Denomination	Quantity	Remarks
15	-	Lock washer B 6 DIN 127	4	)for leaf spring
16	121 504 00 38	Threaded plate	2	)at bracket for)body cross re-)inforcement
17	-	Lock washer B 8 DIN 137	2	)
18	-	Hex. nut M 7 DIN 934-5 S	2	) for leaf spring) at radiator)
18a	-	Washer 7,4 DIN 125	2	)
		COOLING WATER LINE		
19	-	Rubber hose 32x40x70 N 272 (between cooling water thermostat and cooling water discharge nipple)	1	))) state length
19a	-	Rubber hose 32x40x70 N 272 (between cooling water line and cooling water thermostat)	1	) when ordering))
20	-	Hose clamp S 9 N 262	4	)for rubber hose)at cooling water
21	-	Hose strap 9x0,4x300 N 263 (state length when ordering)	4	)thermostat and)cooling water)discharge nipple
22	000 203 65 75	Cooling water thermostat, compl.	1	
23	-	Rubber hose 12x18x260 N 272	1	state length when ordering
24	-	Hose clamp S 9 N 262	2	
25	-	Hose strap 9x0,4x165 N 263	2	state length when ordering

Fig. No.	No. of spare part	Denomination	Quantity	Remarks
26	-	Rubber hose 38 x 46 x 70 N 272 (state length when ordering)	2	for cooling water line, bottom from radiator to engine and distributor tube, cooling water return flow
27	-	Hose clamp WSN 9 N 262	4	
28	-	Hose strap 9 x 0,4 x 380 N 263	4	
29	121 500 00 91	Distributor tube (for cooling water return flow and heating)	1	

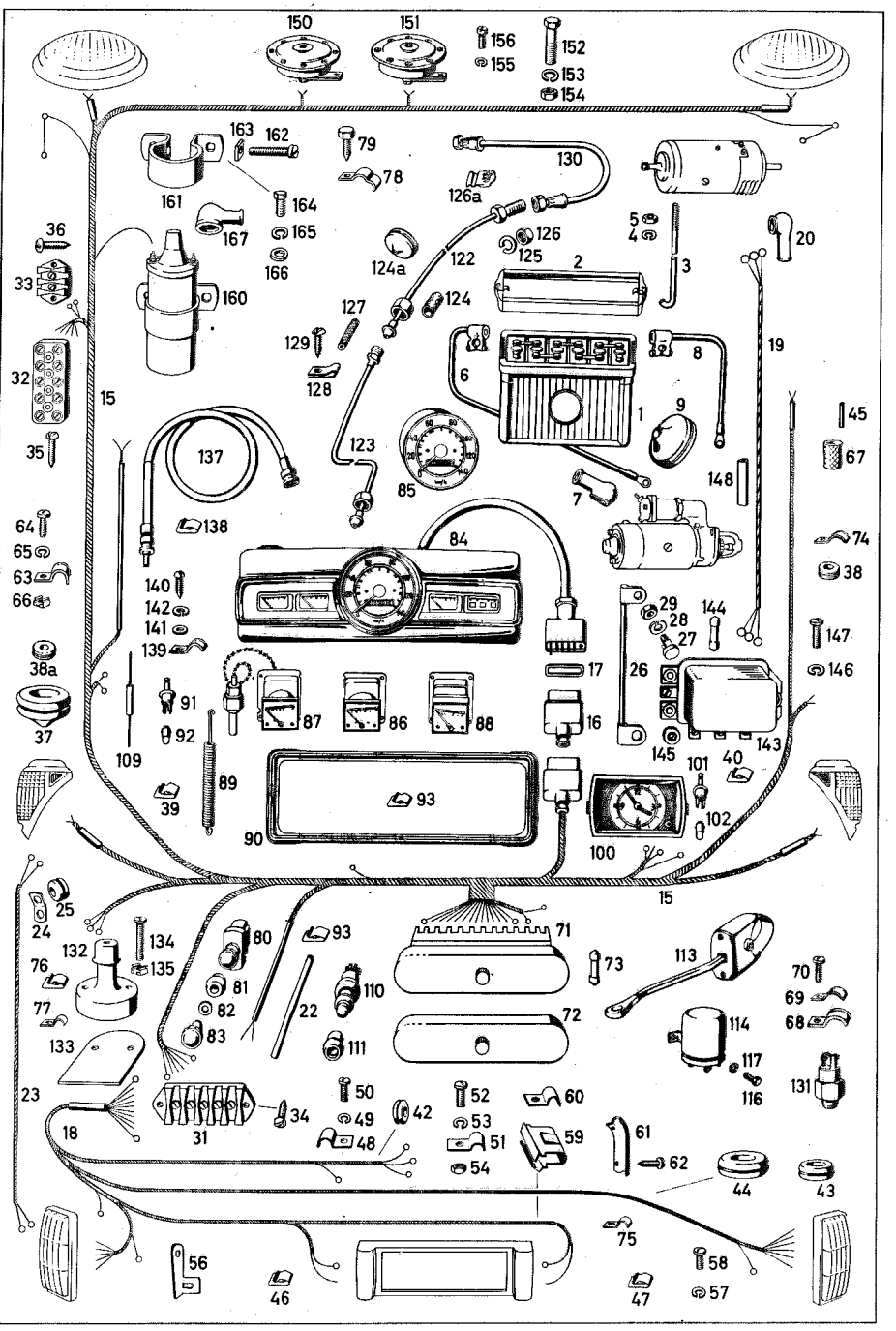
150
151
156
155
152
153
154
163
162
79
78
161
164
167
165
166
130
126a
124a
122
126
125
2
3
5
4
20
36
33
160
127
124
129
128
6
8
19
32
15
1
9
45
67
35
137
123
85
148
7
64
65
63
66
138
84
74
38
140
142
141
139
29
28
27
144
147
146
38a
37
91
92
87
86
88
17
16
26
145
143
101
40
109
39
89
93
90
100
102
15
25
24
132
134
135
76
77
133
80
81
82
83
22
110
111
71
72
73
113
70
69
68
114
117
116
131
23
18
31
34
50
49
48
42
52
53
51
54
60
59
61
62
44
43
75
58
57
56
46
47

Fig. No.	No. of spare part	Denomination	Quantity	Remarks
		BATTERY, STARTING CABLE		
1	000 541 46 01	Battery	1	
2	121 540 01 23	Mounting frame	1	
3	120 541 01 24	Tightening screw	2	)
4	-	Lock washer B 6 DIN 127	2	) for battery mounting
5	-	Hex. nut M 6 DIN 934-5 S	2	)
6	180 540 00 30	Starting cable (from +pole to starter motor)	1	
7	136 546 00 35	Rubber protective cap (for starting cable)	1	
8	180 540 00 31	Ground cable (from -pole battery to clutch housing)	1	
9	186 997 07 81	Rubber grommet (for starting cable through partition)	1	
		CABLES		
15	121 540 01 05	Main cable set	1	
16	000 545 06 28	Housing, lower part with socket	1	
17	000 545 00 80	Shim	1	
18	121 540 01 07	Tail light cable set	1	
19	180 540 00 08	Cable set (from generator to governor)	1	

Fig. No.	No. of spare part	Denomination	Quantity	Remarks
20	000 546 02 35	Rubber protective cap (for clamp at generator D+ and DF)	2	
22	-	Insulating hose B 16x18 sw 200 long DIN 40621 (covering main cable set, rotary switch)	1	state length when ordering
23	120 540 17 38	Cable set (from cable connector 2-poles to reverse drive lamp)	1	
24	180 546 00 43	Bracket (for cable set at reverse drive light switch)	1	
25	000 997 31 81	Grommet (for cable set at bracket)	1	
26	136 540 04 41	Ground cable (from starter flange to dashboard)	1	
27	120 420 02 27	Screw with locking plate	1	)
28	-	Lock washer B 6 DIN 127	1	) for ground) cable at
29	-	Hex. nut M 6 DIN 934-5 S	1	) toe-board)
31	000 546 19 41	Cable connector 5-poles (for tail light cable set)	2	
32	000 546 06 41	Cable connector 5-poles (for steering column cable set)	1	
33	000 546 18 41	Cable connector 2-poles (for heating blower connection)	2	

10/024

Fig. No.	No. of spare part	Denomination	Quantity	Remarks
34	-	Lens-hd. screw S 3, 9x9, 5 DIN 7981 (for cable connector 5-poles at dashboard)	4	
35	-	Lens-hd. screw S 3, 9x19 DIN 7981 (for cable connector 5-poles at wheel house, steering column cable set)	2	
36	-	Lens-hd. screw S 3, 9x13 DIN 7981 (for cable connector 2-poles at wheel arch, left and right, heating blower)	4	
37	181 997 00 81	Grommet	1	)
38	000 997 27 81	Grommet	1	) for main cable set through dashboard
38a	000 997 22 81	Grommet (for flashlight at wheel arch)	1	)
39	000 988 33 78	Fixing clamp	5	
40	000 988 34 78	Fixing clamp	1	
42	000 997 17 81	Grommet (for fuel transmitter line)	1	
43	000 997 22 81	Grommet (for luggage compartment lid, interior panel)	1	
44	000 997 30 81	Grommet (for rear seat covering and tail light cable set)	2	

Fig. No.	No. of spare part	Denomination	Quantity	Remarks
45	-	Insulating hose B 12x13, 6x40 lg. DIN 40621 (for main cable set at wheel house)	2	state length when ordering
46	000 988 33 78	Fixing clamp	8	)for tail lamp)cable set at
47	000 988 34 78	Fixing clamp	5	)cover plate and)for cable at horn
48	186 995 02 20	Fixing clamp (for transmitter line)	1	
49	-	Lock washer B 5 DIN 127	1	)) for fixing clamp
50	-	Lens-hd. screw AM 5x10 DIN 7985-4 S	1	) transmitter) line)
51	-	Fixing clamp 1x8 DIN 72571	1	
52	-	Lens-hd. screw AM 4x10 DIN 7985-4 S	1	
53	-	Lock washer B 4 DIN 127	1	
54	-	Hex. nut M 4 DIN 934-5 S	1	
56	120 546 01 82	Fixing shackle (for tail lamp cable set, left and right)	8	
57	-	Lock washer B 4 DIN 127	2	)for ground)connection at
58	-	Lens-hd. screw AM 4x10 DIN 7985-4 S	2	)luggage com-)partment for)tail lamp
59	000 988 17 78	Fixing clamp (for cable for licence plate lamp at luggage compartment lid)	3	

10/024

Fig. No.	No. of spare part	Denomination	Quantity	Remarks
60	186 995 02 20	Fixing clamp (for cable for licence plate lamp at luggage compartment lid)	2	
61	120 546 00 81	Cable cover plate	1	for cable protective plate at rear cross member
62	-	Lens-hd. screw S 3, 9x13 DIN 7981	2	
63	136 995 00 37	Fixing clamp	1	
64	-	Lens-hd. screw AM 4x10 DIN 7985-4 S	1	
65	-	Lock washer B 4 DIN 127	1	for main cable set at dashboard
-	-	Lens-hd. screw AM 6x10 DIN 7985-4 S	1	
-	-	Lock washer B 6 DIN 127	1	
66	000 990 22 91	Insert-type square cage nut	1	
67	120 997 08 82	Hose fitting 15x17 Ø, 20 mm long (above starter motor, generator cable and main cable set)	4	
68	136 995 01 35	Fixing clamp	1	
69	181 995 00 20	Fixing clamp	1	for steering column cable set at forked member
70	-	Lens-hd. screw S 4, 2x9, 5 DIN 7981	1	
71	180 540 03 50	Fuse box with fuse	1	
72	000 545 02 03	Cover	1	

Fig. No.	No. of spare part	Denomination	Quantity	Remarks
73	-	Fuse 12 Amp. 8 DIN 72581	12	
74	181 995 00 20	Fixing clamp	2	for main cable set at reinforcement bracket, left and right
-	-	Lens-hd. screw AM 4x10 DIN 7985-4 S	2	
-	-	Lock washer B 4 DIN 127	2	
75	153 995 03 22	Fixing clamp	1	for cable to stop light
-	-	Lens-hd. screw S 4,8x9,5 DIN 7981	1	
76	000 988 16 78	Fixing clamp	2	for main cable set to reverse drive lamp at toe-board
77	186 995 02 20	Fixing clamp	1	
-	-	Lens-hd. screw Z 4,8 x9,5 DIN 7981	1	
78	121 995 00 22	Fixing clamp	2	for main cable set and brake fluid line at front frame cross member
79	-	Hex.-hd. screw S 6,3x16 DIN 7976	2	
		INSTRUMENTS AND SWITCHES		
80	120 540 00 44	Push-pull switch (for instrument lighting)	1	
81	120 545 00 72	Rosette	1	
82	000 997 20 40	Felt ring	1	
83	120 545 02 37	Button	1	

10/024

Fig. No.	No. of spare part	Denomination	Quantity	Remarks
84	121 542 02 01	Combi-instrument	1	
85	001 542 43 06	Speedometer	1	
86	000 542 71 02	Oil pressure gauge	1	
87	001 542 44 05	Tele-thermometer	1	
88	000 542 44 03	Fuel gauge	1	
89	120 993 17 10	Tension spring (for combi-instrument mounting)	2	
90	120 542 02 80	Rubber moulding (for combi-instrument)	1	
91	183 545 00 19	Lamp socket	6	
92	-	Bulb H 12 V 2 W DIN 72601	6	
93	000 988 34 78	Fixing clamp (for housing, upper part with lower part at glove box casing)	2	
100	120 542 03 11	Clock, mechanic	1	
101	183 545 00 19	Lamp socket	1	
102	-	Bulb H 12 V 2 W DIN 72601	1	
109	000 545 08 31	Dimming resistor (for instrument lighting)	1	
110	000 545 17 14	Starter, push button switch	1	
111	120 545 03 72	Rosette	1	
113	000 545 10 24	Overtaking signal light switch (black)	1	

Fig. No.	No. of spare part	Denomination	Quantity	Remarks
114	000 544 23 32	Flashlight transmitter 12 V	1	
116	-	Hex. -hd. screw M 6x10 DIN 933-8 G	2	) for flashlight transmitter at partition
117	-	Lock washer B 6 DIN 127	2	)
122	180 540 08 60	Oil pressure gauge line (for connection at flexible hose to oil filter)	1	
123	180 540 06 60	Oil pressure gauge line (for connection at oil pressure gauge combi-instrument)	1	
124	120 997 08 82	Hose fitting 15x17 Ø 20 mm long (for box nut to oil pressure gauge line)	1	state length when ordering
124a	186 997 05 81	Grommet (for oil pressure gauge line and capillary tube through bracket)	1	
125	-	Lock washer B 10 DIN 127	1	)for oil pressure
126	-	Hex. nut M 10 DIN 936-5 S	1	)gauge line at)dashboard,
126a	000 988 55 78	Fixing clamp	5	)wheel arch)strut
127	000 987 09 32	Rubber hose 25 mm long	2	)
128	136 995 05 01	Fixing clamp	2	)for oil pressure)gauge line) at cowl
129	-	Lens-hd. screw Z 3, 9x9, 5 DIN 7981	2	))

10/024

Fig. No.	No. of spare part	Denomination	Quantity	Remarks
130	121 540 00 59	Flexible hose (for oil pressure gauge line)	1	
131	000 545 22 09	Stop light switch	1	see also group 42
132	000 545 04 12	Foot dimmer switch	1	
133	136 545 01 58	Insulating plate	1	)
134	-	Lens-hd. countersunk screw BM 4x30 DIN 7988-4 S	2	) for foot dimmer) switch at) toe-board)
135	000 990 25 91	Cage nut M 4	2	)
137	120 542 03 07	Flexible drive shaft	1	
138	000 988 34 78	Fixing clamp (for tachometer shaft at toe-board, right)	2	
139	120 995 00 01	Fixing clamp	1	))
140	-	Lens-hd. screw AM 5x10 DIN 7985	1	) for tachometer) drive shaft at) bearing, regu-
141	120 990 31 40	Washer	1	) lating shaft)
142	-	Lock washer B 5 DIN 127	1	)
143	000 154 55 06	Three-element voltage regulator	1	
144	000 545 16 34	Fuse	1	
145	000 154 02 50	Rubber bushing with tubular rivet	3	
146	-	Lock washer B 6 DIN 127 (for regulator at bracket, wheel arch)	3	

Fig. No.	No. of spare part	Denomination	Quantity	Remarks
147	-	Lens-hd. screw AM 6x20 DIN 7985-4 S (for regulator at bracket, wheel arch)	3	
148	000 997 07 81	Grommet, make Hellermann (for cable of voltage regulator, generator)	3	
150	000 542 44 20	Horn	1	
151	000 542 73 20	Horn	1	
152	-	Hex.-hd. screw M 10x28 DIN 931-8 G	1	for horn at bracket
153	-	Lock washer B 10 DIN 127	1	
154	-	Hex. nut M 10 DIN 934-5 S	1	
155	-	Lock washer B 4 DIN 127	2	for cable connection at horn
156	-	Cylindr. screw AM 4x8 DIN 84-4 S	2	
160	000 158 00 03	Ignition coil	1	
161	000 158 02 40	Fixing clamp	1	
162	-	Cylindr. screw AM 5x40 DIN 84-4 S	1	
163	-	Flat square nut M 5 DIN 562	1	
164	-	Hex.-hd. screw M 6x15 DIN 933-8 G	2	for ignition coil at bracket
165	-	Lock washer B 6 DIN 127	2	
166	-	Washer A 6 DIN 9021	2	
167	000 546 02 35	Rubber protective cap (for ignition coil)	2	

10/024

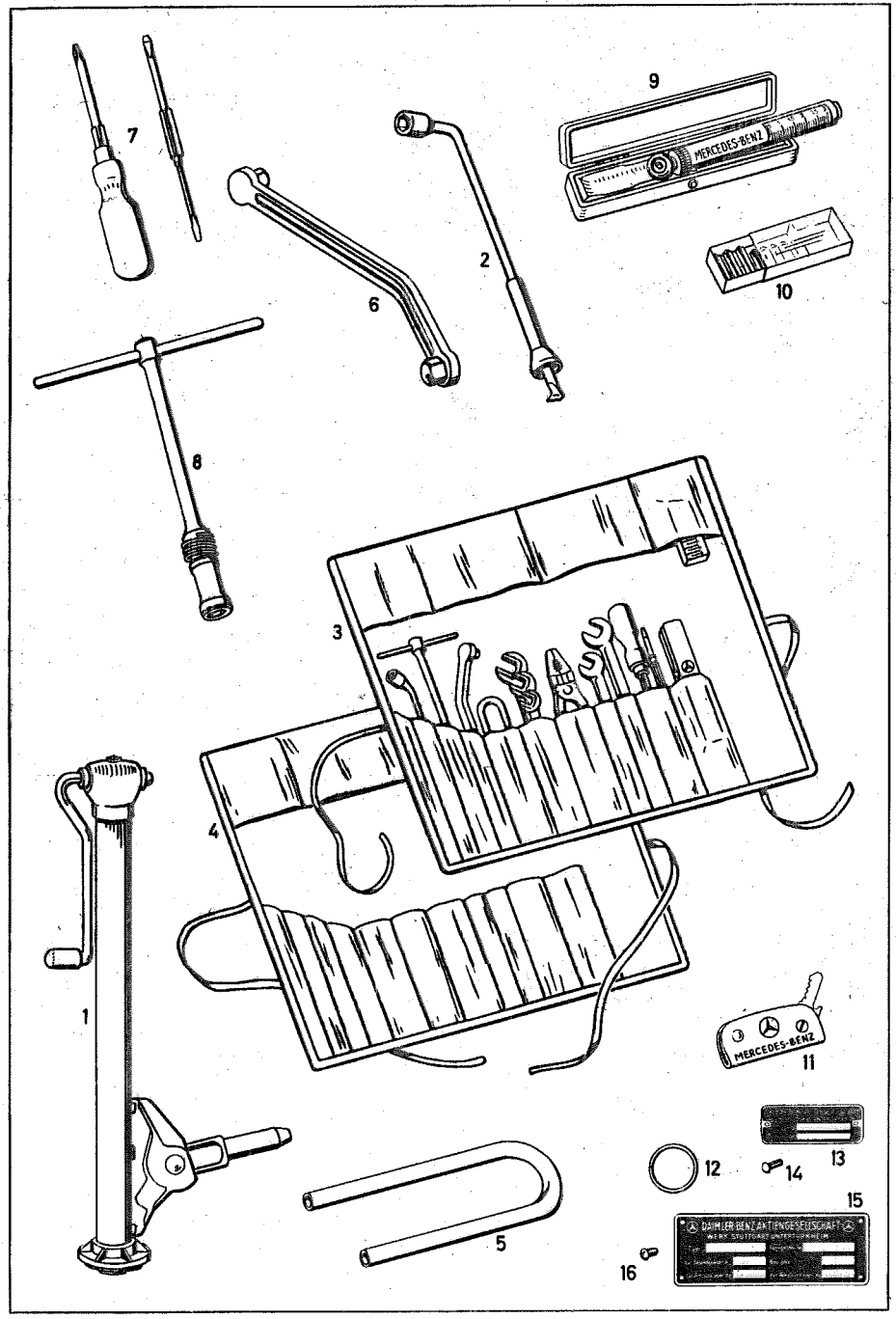
7
9
MERCEDES-BENZ
2
6
10
8
3
4
1
MERCEDES-BENZ
11
12
13
14
15
5
16
DAIMLER-BENZ AKTIENGESELLSCHAFT

Fig. No.	No. of spare part	Denomination	Quantity	Remarks
		TOOLS		
1	000 583 35 15	Car jack	1	
2	120 581 01 46	Combination wrench, opening 17	1	
3	121 580 00 03	Tools bag with tools	1	
4	186 585 00 01	Tools bag	1	
5	120 581 00 60	Mounting fork	1	
6	120 581 06 65	Double end hex. -hd. socket screw wrench, opening 14 (for filling in and draining oil at transmission, rear axle and fuel outlet)	1	
7	000 581 01 17	Screw driver in 3 parts	1	
8	198 581 00 36	Spark plug wrench with handle, opening 21	1	
9	000 583 02 47	Air pressure gauge 0.5 - 3 atü	1	
10	136 580 00 10	Box with spare fuses	1	
		ACCESSORIES		
11	183 580 01 93	Key wallet	1	
12	-	Key ring N 397 b (for safety and door key)	1	

Fig. No.	No. of spare part	Denomination	Quantity	Remarks
13	-	Chassis plate FU 3 N 202	1	
14	-	Grooved nail 3 x 6 DIN 1476	2	
15	-	Type plate WU 8 N 202	1	
16	-	Lens-hd. screw S 2, 9x6, 5 DIN 7981	4	

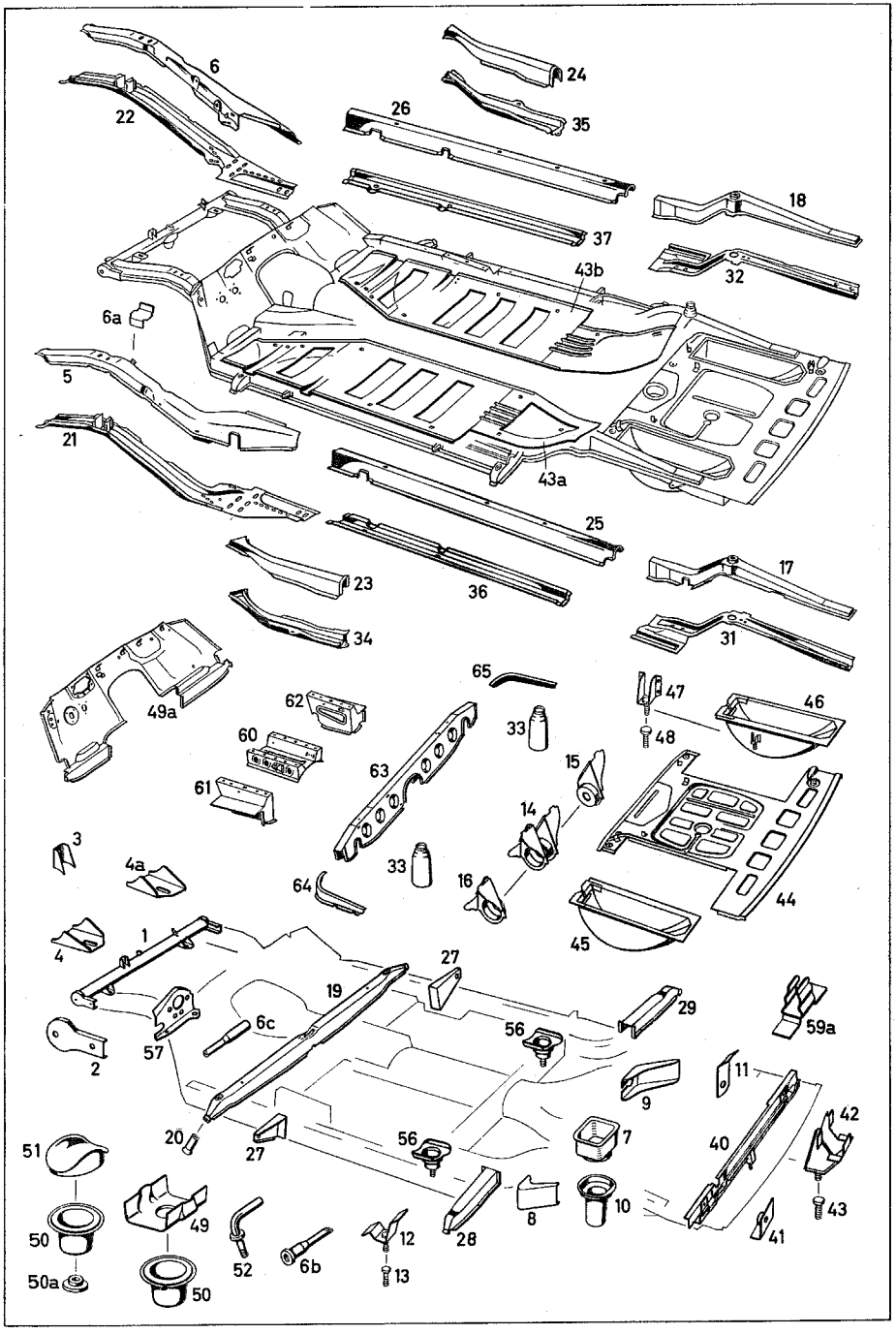
6
22
24
35
26
37
18
32
43b
6a
5
21
43a
25
36
23
34
17
31
65
47
46
48
49a
62
60
61
63
33
15
14
16
64
3
4a
4
1
27
19
6c
57
2
56
29
59a
9
11
42
40
43
41
20
27
56
7
10
8
28
51
50
50a
49
50
52
6b
12
13

Fig. No.	No. of spare part	Denomination	Quantity	Remarks
		FRAME FLOOR		
1	10 120 610 02 17	Cross tube, front, complete	1	
2	10 120 610 00 36	Bracket (for bumper, front)	2	
3	10 120 612 00 31	Support (for horn)	1	
4	10 121 612 01 43	Support, left	1	for radiator mounting
4a	10 121 612 02 43	Support, right	1	for radiator mounting
5	10 120 610 01 77	Side member half, front, top, left	1	
6	10 120 610 02 77	Side member half, front, top, right	1	
6a	120 427 00 27	Stop (for locking hand brake lever)	1	
6b	120 427 02 74	Pin (for hand brake lever)	1	
6c	120 293 05 17	Tube (for pedal mounting)	1	
7	10 180 612 02 21	Housing (for rear axle suspension, top)	1	
8	180 427 05 41	Bracket (for brake cable, left)	1	
9	180 427 06 41	Bracket (for brake cable, right)	1	
10	10 180 612 01 21	Housing (for rear axle suspension, bottom)	1	

Fig. No.	No. of spare part	Denomination	Quantity	Remarks
11	10 120 612 00 23	Bracket (for brake fluid line, rear, right)	1	
12	10 120 610 00 12	Bracket (for brake fluid line, rear, left)	1	
13	000 990 12 20	Cylindr. screw	1	
14	10 180 610 00 31	Support	1	) rear, right for taking up single-joint axle
15	10 180 612 00 43	Support, outside	1	
16	10 180 612 01 43	Support, inside	1	
17	10 120 610 01 10	Side member, top, rear, left	1	
18	10 120 610 02 10	Side member, top, rear, right	1	
19	10 120 610 00 18	Cross member, front	1	
20	10 120 611 01 47	Mounting (for car jack, front)	2	
21	10 120 610 03 77	Forked member, bottom, left	1	
22	10 120 610 04 77	Forked member, bottom, right	1	
23	10 120 611 01 22	Side member support, top, left	1	
24	10 120 611 02 22	Side member support, top, right	1	
25	10 120 611 01 21	Side member half, top, outside, left	1	
26	10 120 611 02 21	Side member half, top, outside, right	1	
27	10 120 611 00 33	Support (for entrance sill)	1	

Fig. No.	No. of spare part	Denomination	Quantity	Remarks
28	10 180 610 01 13	Support (for car jack, left)	1	
29	10 180 610 02 13	Support (for car jack, right)	1	
31	10 120 611 03 20	Side member half, rear, bottom, left	1	
32	10 120 611 04 20	Side member half, rear, bottom, right	1	
33	10 180 610 00 58	Cup (for shock absorber mounting)	2	
34	10 120 611 03 22	Side member support, bottom, left	1	
35	10 120 611 04 22	Side member support, bottom, right	1	
36	10 120 611 03 21	Side member half, bottom, outside, left	1	
37	10 120 611 04 21	Side member half, bottom, outside, right	1	
40	10 120 610 00 16	End cross member	1	
41	10 120 610 00 25	Reinforcement (for supporting exhaust tube, rear)	2	
42	10 120 610 00 38	Bracket (for fuel tank suspension, rear)	1	
43	000 990 14 20	Cylindr. screw	1	

Fig. No.	No. of spare part	Denomination	Quantity	Remarks
43a	10 120 616 01 67	Main floor, left	1	
43b	10 120 616 02 67	Main floor, right	1	
44	10 120 610 01 62	Floor, rear	1	
45	10 120 610 03 75	Spare wheel recess, left	1	
46	10 120 610 04 75	Spare wheel recess, right	1	
47	10 120 610 00 37	Bracket (for fuel tank)	2	
48	000 990 14 20	Cylindr. screw	2	
49	10 120 616 00 76	Spacer cup, front (at forked member, left and right)	2	
49a	10 121 610 00 79	Toe-board	1	
50	120 330 09 61	Mounting (for front axle)	3	
50a	120 331 00 72	Nut	3	
51	10 120 616 01 26	Spacer cup 1.5 mm high)	1	)
-	10 120 616 02 26	Spacer cup 2.5 mm high) optional for mounting, front (height of center of cup)	1	)
-	10 120 616 03 26	Spacer cup 3.5 mm high)	1	) welded at cross tube, front, center
-	10 120 616 04 26	Spacer cup 4.5 mm high)	1	)
-	10 120 616 05 26	Spacer cup 5.5 mm high)	1	)
-	10 120 616 06 26	Spacer cup 6.5 mm high)	1	)

Fig. No.	No. of spare part	Denomination	Quantity	Remarks
-	10 120 616 07 26	Spacer cup 7.5 mm high (optional for mounting, front height of center of cup)	1	welded at cross tube, front center
-	10 120 616 08 26	Spacer cup 8.5 mm high (optional for mounting, front height of center of cup)	1	welded at cross tube, front center
-	10 120 616 09 26	Spacer cup 9.5 mm high (optional for mounting, front height of center of cup)	1	welded at cross tube, front center
52	120 460 04 35	Bracket (for steering shock absorber at side member half, left)	1	
56	180 350 01 33	Mounting for brace (left and right for rear axle)	2	
57	121 431 00 40	Support (for main brake cylinder)	1	
59a	10 120 890 00 10	Bracket (for car jack wrench, rear)	1	bracket for car jack wrench, front see group 64
60	10 120 610 08 66	Driver's seat support, center	1	
61	10 120 616 07 69	Driver's seat support, left, external	1	
62	10 120 616 08 69	Driver's seat support, right, external	1	
63	10 120 616 00 70	Rear seat support, front	1	
64	10 120 616 01 70	Rear seat support, left, external	1	
65	10 120 616 02 70	Rear seat support, right, external	1	

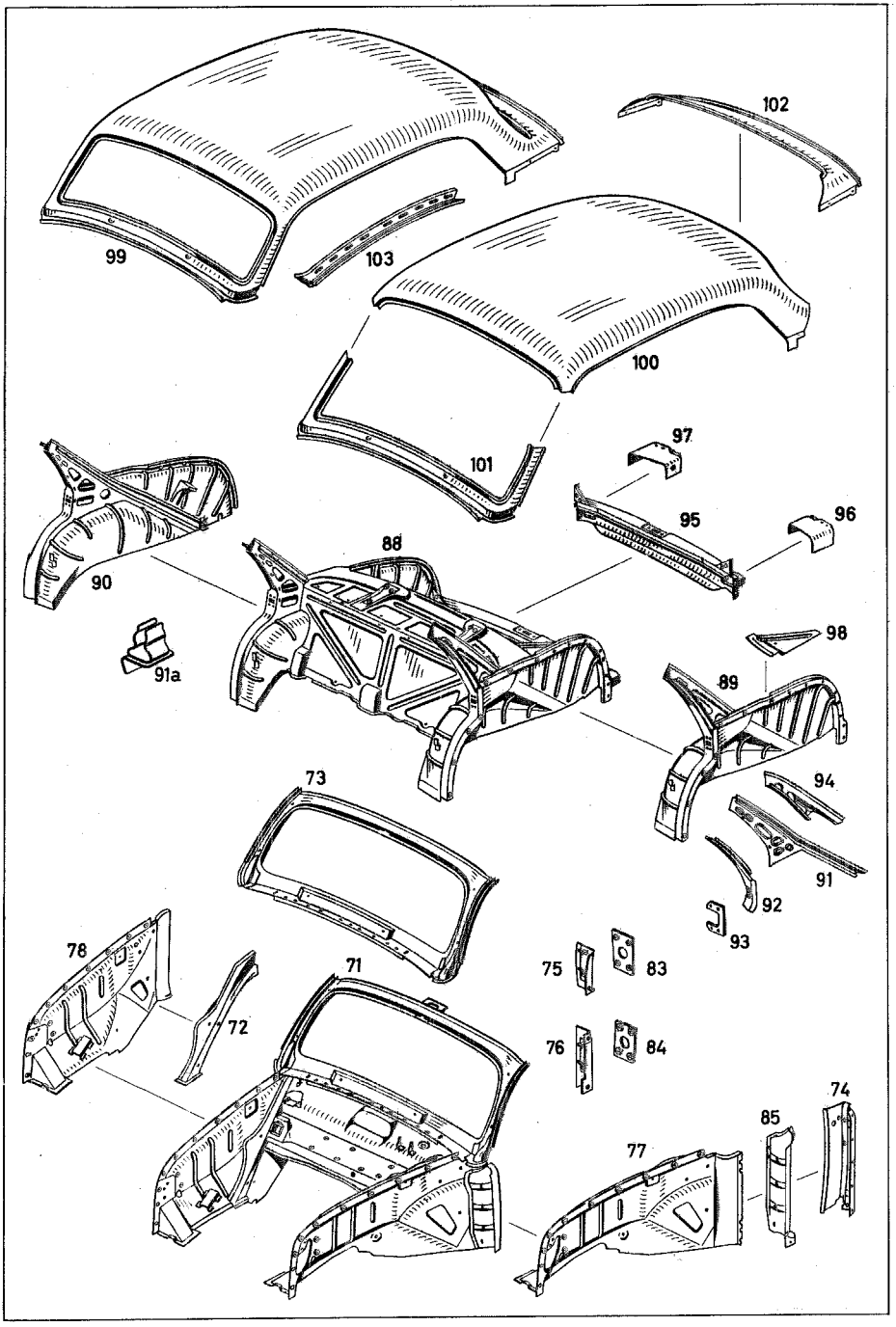
102
99
103
100
101
97
95
96
90
88
91a
98
89
94
91
92
93
73
78
71
72
75
83
76
84
74
85
77

Fig. No.	No. of spare part	Denomination	Quantity	Remarks
		FRONT WALL		
71	10 121 620 00 05	Front wall, shell	1	
-	10 120 620 01 19	Strut (for wheel arch, left)	1	
72	10 120 620 02 19	Strut (for wheel arch, right)	1	
73	10 120 620 05 06	Front wall frame, interior, top with cover plate	1	
74	10 120 620 05 71	Angle plate, left, bottom	1	)part at which
-	10 120 620 06 71	Angle plate, right, bottom	1	)the hinges are)mounted
75	10 120 620 01 11	Reinforcement, top (for door hinge, left)	1	
-	10 120 620 02 11	Reinforcement, top (for door hinge, right)	1	
76	10 120 620 05 11	Reinforcement, bottom (for door hinge, left)	1	
-	10 120 620 06 11	Reinforcement, bottom (for door hinge, right)	1	
77	10 120 620 09 61	Wheel house, front, left	1	
78	10 121 620 02 61	Wheel house, front, right	1	
83	10 120 621 01 13	Threaded plate, top, left	1	)
-	10 120 621 02 13	Threaded plate, top, right	1	)for door hinge
84	10 120 621 03 13	Threaded plate, bottom, left	1	)

Fig. No.	No. of spare part	Denomination	Quantity	Remarks
-	10 120 621 04 13	Threaded plate, bottom, right (for door hinge)	1	
85	10 120 620 01 72	Reinforcement plate, outside, left	1	)hinge side
-	10 120 620 02 72	Reinforcement plate, outside, right	1	)on angle plate)
		REAR PART		
88	10 120 640 00 05	Rear part, shell	1	
89	10 120 640 01 59	Inner panel with wheel house, left	1	
90	10 120 640 02 59	Inner panel with wheel house, right	1	
91	10 120 640 01 66	Inner panel, left	1	)part of roof
-	10 120 640 02 66	Inner panel, right	1	)frame, top, up)to wheel arch, rear
91a	10 120 890 01 10	Bracket (for car jack wrench, front)	1	bracket for car jack wrench, rear see group 61
92	10 120 640 01 75	Angle plate, left	1	)part of wheel
-	10 120 640 02 75	Angle plate, right	1	)arch up to roof)for fixing)locking pin
93	10 120 761 01 36	Threaded plate (for locking eye)	2	
94	10 120 646 01 63	Cover plate, left	1	)between inner
-	10 120 646 02 63	Cover plate, right	1	)panel and roof)panelling

Fig. No.	No. of spare part	Denomination	Quantity	Remarks
95	10 120 640 00 71	Center piece, bottom	1	
96	10 120 647 01 34	Cover plate, left	1	)for bracket,)bumper, rear
97	10 120 647 02 34	Cover plate, right	1	)
98	10 120 646 01 18	Angular reinforcement, left	1	)between luggage)compartment
-	10 120 646 02 18	Angular reinforcement, right	1	)cover plate and)wheel house
		TOP		
99	10 121 650 00 70	Top panel (from engine hood to flap)	1	
100	10 120 657 00 09	Top panel (panel from windscreen, top, to rear wall window)	1	
101	10 120 650 01 72	Front wall frame, external (from engine hood to top, external only)	1	
102	10 180 657 00 71	Center piece, rear, top (from rear wall window to flap)	1	
103	10 120 650 01 11	Top frame, left	1	
-	10 120 650 02 11	Top frame, right	1	

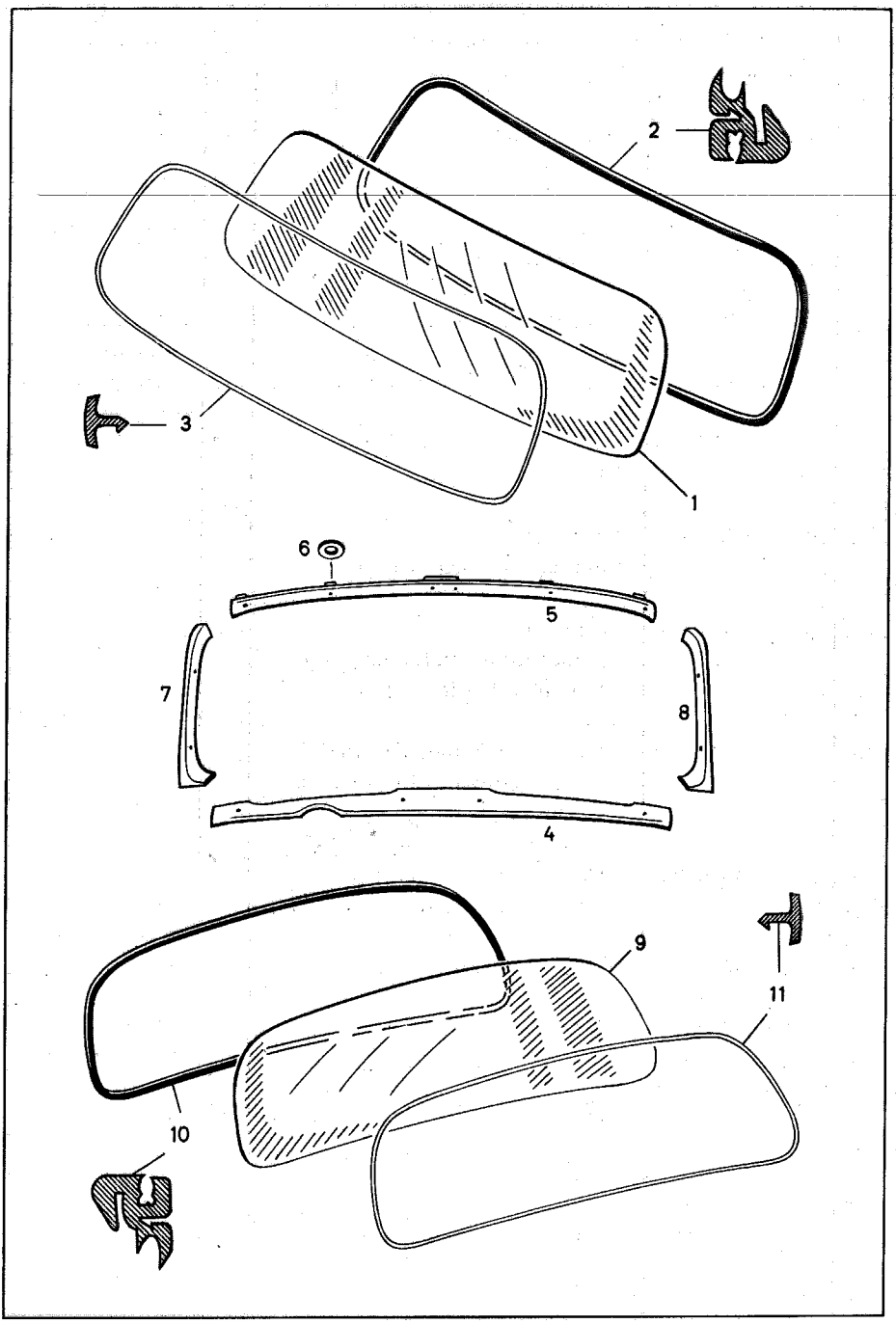
2
3
1
6
5
7
8
4
9
11
10

Fig. No.	No. of spare part	Denomination	Quantity	Remarks
		WINDSCREEN		
1	10 120 671 00 10	Windscreen (compound glass)	1	optional
-	10 120 671 01 10	Windscreen (safety glass)	1	optional
2	10 120 671 00 20	Sealing frame	1	
3	10 120 671 00 30	Ornamental moulding	1	
4	10 121 670 00 51	Window moulding, bottom	1	
-	-	Lens-hd. countersunk screw S 3, 5x25 DIN 7983 chrom.-plated (for window moulding, bottom, at front wall)	5	
5	10 120 671 03 51	Window moulding, top	1	
-	-	Lens-hd. screw S 3, 5x22 DIN 7981 chrom.-plated	4	for window moulding, top, at windscreen
6	000 987 29 41	Rubber plate	4	for window moulding, top, at windscreen
7	10 120 671 06 51	Window moulding, side, left	1	
8	10 120 671 07 51	Window moulding, side, right	1	
-	-	Lens-hd. screw S 3, 5x16 DIN 7981 chrom.-plated	4	for window moulding at front wall
-	000 987 29 41	Rubber plate	4	for window moulding at front wall
		REAR WALL WINDOW		
9	10 120 678 00 10	Glass pane	1	
10	10 120 678 00 20	Sealing frame	1	
11	10 120 678 00 30	Ornamental moulding (ornamental bar)	1	

10/024

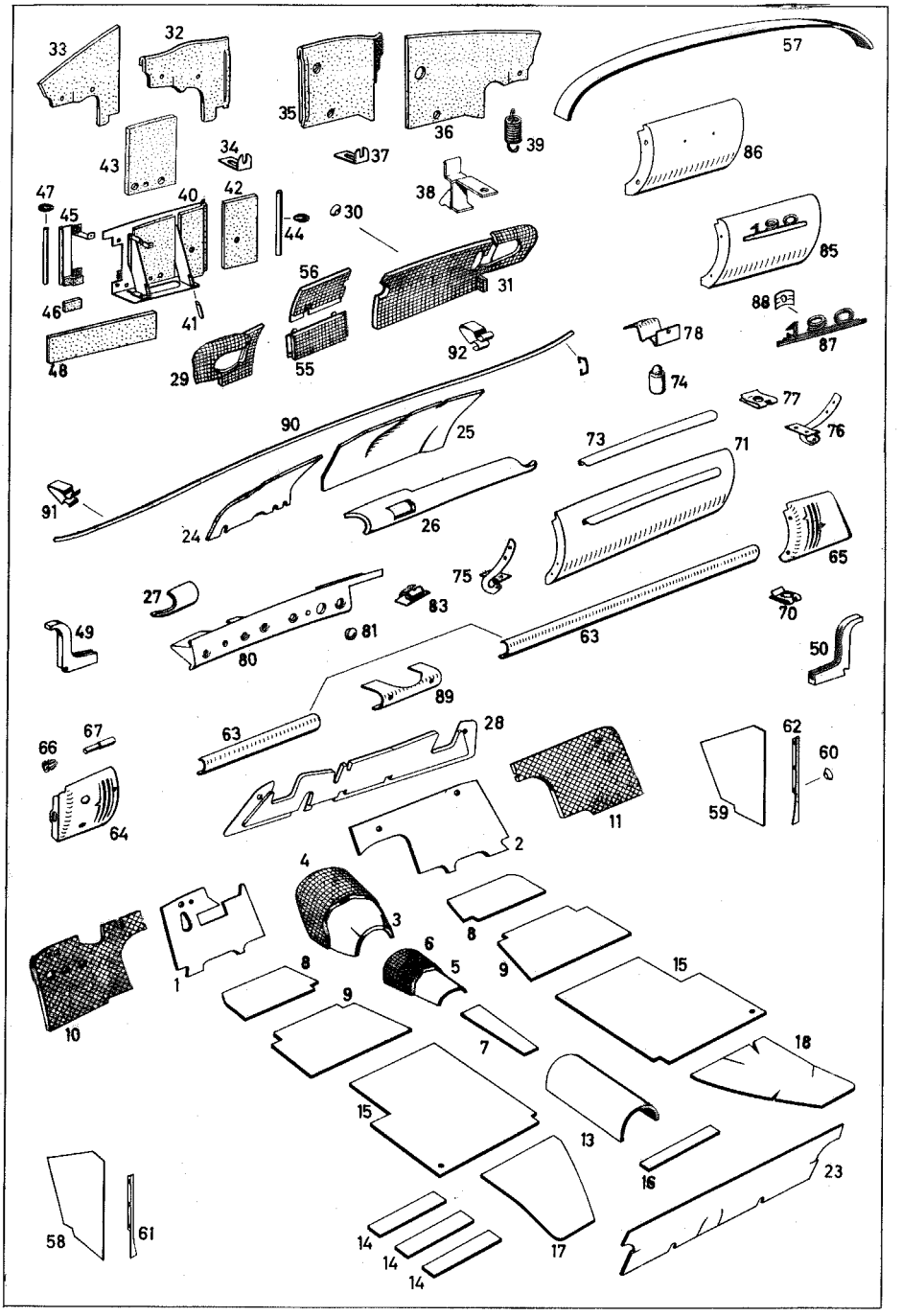
33
32
35
36
57
43
34
37
39
86
47
45
40
42
44
38
30
46
41
56
31
100
85
48
29
55
92
78
88
87
74
77
90
25
76
73
71
91
24
26
65
27
75
83
70
49
80
81
63
50
89
66
67
63
28
62
60
64
11
59
4
2
3
8
1
6
5
9
15
10
8
9
7
18
15
13
16
23
58
61
14
14
14
17

Fig. No.	No. of spare part	Denomination	Quantity	Remarks
1	10 120 682 02 04	Damping, toe-board, left	1	bitumen felt
2	10 120 682 01 04	Damping, toe-board, right	1	bitumen felt
3	10 120 682 01 06	Damping, passage, front for transmission cover plate	1	bitumen felt
4	10 120 682 02 13	Damping, passage, front for transmission cover plate	1	waffle felt
5	10 120 682 00 07	Damping, center passage behind transmission cover plate	1	bitumen felt
6	10 120 682 00 14	Damping, center passage behind transmission cover plate	1	waffle felt
7	10 120 682 00 16	Damping, seat, center	1	bitumen felt
8	10 120 682 01 01	Damping, driver's seat floor, front	2	bitumen felt
9	10 120 682 02 01	Damping, driver's seat floor, rear	2	bitumen felt
10	10 120 682 01 12	Damping, toe-board, left	1	waffle felt
11	10 120 682 02 12	Damping, toe-board, right	1	waffle felt
13	10 120 682 00 05	Damping, passage in rear compartment	1	bitumen felt
14	10 120 682 00 02	Damping, bed in main floor	6	bitumen felt
15	10 120 682 00 08	Damping, rear compartment floor	2	bitumen felt
16	10 120 682 01 09	Damping center passage below rear seat	2	bitumen felt
17	10 120 682 00 09	Damping below rear seat, left	1	bitumen felt

Fig. No.	No. of spare part	Denomination	Quantity	Remarks
18	10 120 682 02 09	Damping below rear seat, right	1	bitumen felt
23	10 180 682 01 10	Damping, intermediate wall behind back rest of rear seat	1	jute felt
24	10 120 680 01 28	Damping, glove box, left	1	
25	10 120 680 02 28	Damping, glove box, right	1	
26	10 120 680 01 25	Damping, instrument panel, top, right	1	
27	10 120 680 02 25	Damping, instrument panel, top, left	1	
28	10 120 680 06 25	Damping, dashboard, upper part (below instrument panel)	1	
29	10 120 680 05 29	Damping, cowl, left (in engine space)	1	
-	-	Lens-hd. countersunk screw S 3, 5 x 22 DIN 7983 chrom.-plated	1	))for damping)at cowl, left
30	000 985 12 62	Countersunk washer	1	)
31	10 120 680 08 29	Damping, cowl, right	1	
-	-	Lens-hd. countersunk screw S 3, 5 x 22 DIN 7983 chrom.-plated	4	))for damping)at cowl, right
-	000 985 12 62	Countersunk washer	4	)
32	10 180 680 01 76	Partition, left	1	
33	10 180 687 01 70	Damping at partition, left	1	
34	10 180 687 00 12	Angle	2	

Fig. No.	No. of spare part	Denomination	Quantity	Remarks
-	-	Lens-hd. screw AM 5x12 DIN 7985	2	)
-	-	Washer 5, 3 DIN 433	2	) for angle at
-	-	Lock washer A 5 DIN 137	2	) partition, left
-	-	Hex. nut M 5 DIN 934-5 S	2	)
-	-	Lens-hd. screw AM 4x12 DIN 7985	1	)
-	-	Lock washer B 4 DIN 127	1	) for partition) at air duct
-	-	Washer A 4 DIN 9021	1	)
35	10 180 680 02 76	Partition, right	1	
36	10 180 687 02 70	Damping at partition	1	
37	10 180 687 00 12	Angle	1	
-	-	Lens-hd. screw AM 5x12 DIN 7985	1	)
-	-	Washer 5, 3 DIN 433	1	) for angle at) partition,
-	-	Lock washer A 5 DIN 137	1	) right
-	-	Hex. nut M 5 DIN 934-5 S	1	)
38	10 121 830 00 50	Bracket (for heater tube)	1	
-	-	Countersunk screw AM 6x15 DIN 7987 (for bracket at cowl)	1	
39	120 993 16 10	Tension spring (for partition at dashboard)	1	

10/024

Fig. No.	No. of spare part	Denomination	Quantity	Remarks
40	10 121 680 01 56	Bracket (for ATE booster brake)	1	only valid if ATE booster brake is installed upon spec. reques
41	000 987 10 36	Rubber profile 40 mm long	1	state length when ordering
42	10 180 687 00 70	Damping at bracket ATE booster brake	1	
43	10 121 687 01 70	Damping at bracket ATE booster brake	1	
44	000 987 10 36	Rubber profile 250 mm long	1	state length when ordering
-	-	Hex.-hd. screw M 6x15 DIN 933	4	) for bracket at dashboard
-	-	Lock washer B 6 DIN 127	4	)
45	10 180 680 01 58	Bracket for fuse box	1	
46	10 180 687 03 70	Damping at bracket fuse box	1	
47	000 987 10 36	Rubber profile 230 mm long	1	state length when ordering
-	-	Lens-hd. screw Z 4,2x19 DIN 7981 (for bracket, fuse box, at bracket for ATE booster brake)	2	
48	10 180 687 04 70	Seal (for bracket, ATE booster brake)	1	
49	10 180 687 01 97	Seal, left, at wheel house)	1	

Fig. No.	No. of spare part	Denomination	Quantity	Remarks
50	10 180 687 02 97	Seal, right, at wheel house	1	
55	10 120 680 09 29	Damping, cowl, center, bottom (in engine space)	1	
-	-	Lens-hd. countersunk screw S 3,5x22 DIN 7983 chrom.-plated	5	for damping, center, at cowl
-	000 985 12 62	Countersunk washer	5	
56	10 120 680 06 29	Damping, cowl, center, top (in engine space)	1	
57	10 120 682 00 51	Damping, top 70x6x1250 mm long	7	jute felt with paper insert
58	10 120 688 07 06	Lining, front wall, lateral, bottom, left	1	
59	10 120 688 08 06	Lining, front wall, lateral, bottom, right	1	
-	-	Lens-hd. countersunk screw S 2,9x9,5 DIN 7983 chrom.-plated	2	for lining at front wall, lateral,
60	000 985 05 62	Countersunk washer	2	bottom
61	10 120 688 01 20	Fixing rail, front, bottom, left	1	for front wall lining
62	10 120 688 02 20	Fixing rail, front, bottom, right	1	
-	-	Countersunk screw Z 3,9x13 DIN 7982 chrom.-plated	7	for fixing rail at front wall,
-	-	Countersunk screw S 3,9x9,5 DIN 7982 chrom.-plated	1	lateral

10/024

Fig. No.	No. of spare part	Denomination	Quantity	Remarks
63	000 993 41 86	Lining, front wall, instrument panel, bottom and top	1	state colour, length and width when ordering
64	10 120 689 05 85	Lining (for instrument panel, lateral, left)	1	
65	10 120 689 06 85	Lining (for instrument panel, lateral, right)	1	
66	000 988 77 78	Clip, round	2	) for lateral
67	120 991 02 07	Pin	2	) lining at) angle plate
-	000 994 16 45	Clip)) optional	4	)
70	000 994 04 45	Clip)	4	) for lining at) partition,) external
-	-	Lens-hd. countersunk screw Z 4, 2x13 DIN 7983	4	))
71	10 120 680 04 83	Cover (for glove box)	1	
73	10 120 689 00 70	Handle (for glove box)	1	
-	-	Countersunk screw AM 3x8 DIN 7987	3	for handle at cover
74	10 120 680 01 84	Ball-type latch	1	
75	10 120 680 03 87	Hinge, left))for glove box cover	1	
76	10 120 680 04 87	Hinge, right)	1	
-	-	Countersunk screw AM 4x6 DIN 7987 (for hinge at cover)	4	

Fig. No.	No. of spare part	Denomination	Quantity	Remarks
-	000 994 16 45	Clip)) optional	4	))
77	000 994 04 45	Clip)	4	) for glove box) cover at in-) strument panel
-	-	Lens-hd. countersunk screw S 4, 2x13 DIN 7983	4	))
78	10 120 689 00 41	Support (for glove box cover)	1	
-	-	Lens-hd. countersunk screw S 2, 9x6, 5 DIN 7983 chrom. -plated	1	))for support at) glove box,
-	-	Lens-hd. screw Z 2, 9x6, 5 DIN 7981	2	) shell plate)
80	10 120 680 03 11	Mounting plate (for control buttons)	1	
81	10 120 689 00 24	Washer (for charging control lamp)	1	
-	-	Lens-hd. screw S 3, 9x16 DIN 7981	3	))for mounting
-	-	Washer A 4 DIN 9021	3	)plate at shell)plate)
83	000 994 13 45	Clip	3	)
85	10 121 680 00 96	Cover, instrument panel, center	1	
86	10 120 689 02 39	Cover	1	
87	10 121 817 00 14	Type designation plate, interior at instrument panel	1	
88	000 994 00 45	Spring nut (for type designation plate at cover)	2	

10/024

Fig. No.	No. of spare part	Denomination	Quantity	Remarks
-	000 994 04 45	Clip)) optional	4	))
-	000 994 16 45	Clip)	4	)for cover,)center at
-	-	Lens-hd. countersunk screw Z 4, 2x13 DIN 7983	4	)partition)
89	10 120 680 00 75	Cover plate (at instrument panel)	1	state colour when ordering
-	000 983 45 86	Covering	1	state colour, length and width when ordering
-	000 985 09 62	Countersunk washer	2	)for cover plate)at shell plate,
-	-	Lens-hd. countersunk screw S 2, 9x9, 5 DIN 7983 chrom. -plated	2	)glove box)
90	10 120 689 01 71	Ornamental moulding (for instrument panel)	1	
91	000 988 58 78	Clamp	6	)for ornamental)moulding at
92	000 988 47 78	Expanding clip	4	)instr. panel

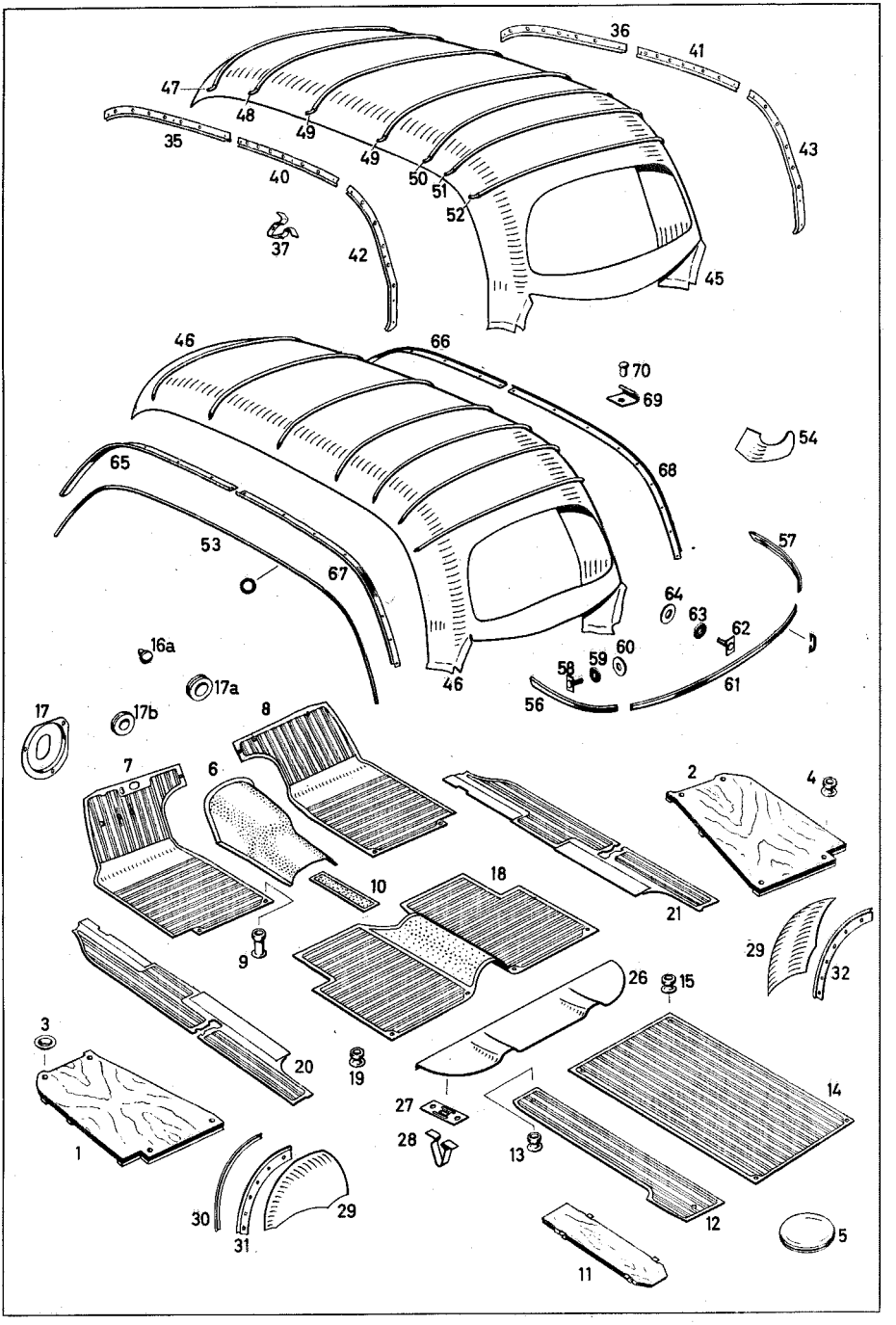
36
41
47
48
49
35
49
43
40
50
51
52
37
42
45
46
66
70
69
54
65
68
53
67
57
64
63
62
16a
60
59
58
17a
46
56
61
17
17b
8
7
6
2
4
10
18
21
9
29
32
26
15
3
20
19
14
27
28
13
1
30
29
31
12
5
11

Fig. No.	No. of spare part	Denomination	Quantity	Remarks
1	10 120 680 01 08	Driver's floor, left	1	
2	10 120 680 02 08	Driver's floor, right	1	
3	000 990 17 42	Countersunk washer	4	)
-	-	Countersunk screw S 5, 5x22 DIN 7982	4	)for driver's floor at
4	000 988 22 80	Button	4	)frame floor
-	-	Lens-hd. countersunk screw S 4, 2x32 DIN 7983	4	)
5	136 984 02 52	Cover, filling device in rear floor	1	
6	10 120 684 02 13	Rubber mat (covering for tunnel, front)	1	))state colour
7	10 120 684 01 02	Rubber mat (for driver's floor, left)	1	)and body-No.)when ordering
8	10 120 684 02 02	Rubber mat (for driver's floor, right)	1	)
9	000 988 23 80	Button	3	))for rubber mat
-	-	Lens-hd. countersunk screw S 4, 2x32 DIN 7983	3	)at toe-board
10	10 120 684 00 06	Covering (for center tunnel between driver's seat)	1	state colour and body No. when ordering
11	10 120 680 00 09	Cover plate (for spare wheel recess)	1	

Fig. No.	No. of spare part	Denomination	Quantity	Remarks
12	10 120 684 01 05	Rubber mat (in luggage compartment, left)	1	
13	000 988 22 80	Button	2	for rubber mad at rear floor
-	-	Lens-hd. countersunk screw S 4, 2x19 DIN 7983	2	
14	10 120 684 01 04	Rubber mat (in luggage compartment, center part)	1	
15	000 988 22 80	Button	4	
-	-	Lens-hd. countersunk screw S 4, 2x19 DIN 7983	4	
16a	000 987 18 40	Rubber buffer (for locking holes in glove box, cover plate)	1	
17	10 186 687 00 37	Cup for pedal sealing	2	
-	-	Lens-hd. screw Z 3, 5x6, 5 DIN 7981 (for cup at dashboard)	6	
17a	000 987 03 44	Locking plate (for sealing idle run cable)	2	
17b	000 987 02 44	Locking plate (for locking through bore, not necessary in dashboard)	1	
18	10 120 684 00 14	Rubber mat for rear floor	1	
19	000 988 22 80	Button (for rubber mat at floor)	4	

10/024

Fig. No.	No. of spare part	Denomination	Quantity	Remarks
-	-	Lens-hd. countersunk screw S 4, 2x19 DIN 7983 (for rubber mat at floor)	4	
20	10 120 686 05 80	Covering (for entrance, left)	1	
21	10 120 686 06 80	Covering (for entrance, right)	1	
26	10 120 690 00 49	Covering on luggage compartment cover plate (board beneath rear wall window)	1	state colour when ordering
27	000 984 02 60	Bracket, lower part	9	
28	000 988 61 78	Bracket, upper part	9	
29	000 983 22 82	Covering at wheel arch, left and right (cloth)	2	state colour, length and width when ordering
30	10 120 737 03 93	Draft excluder, wheel arch	2	state colour when ordering
31	10 120 694 01 61	Fixing rail, left (over wheel arch, rear)	1	for fixing draft excluder and lining
32	10 120 694 02 61	Fixing rail, right (over wheel arch, rear)	1	
-	-	Countersunk screw S 3, 9x13 DIN 7982 (for fixing rail at wheel arch)	12	
35	10 120 695 01 35	Fixing rail, front, left (over driver's door)	1	for fixing dome at roof frame, front
36	10 120 695 02 35	Fixing rail, front, right (over driver's door)	1	

Fig. No.	No. of spare part	Denomination	Quantity	Remarks
37	000 988 35 78	Clamp (for rail at roof frame)	4	
40	10 120 695 03 35	Fixing rail, center, left) over	1	)for fixing dome
41	10 120 695 04 35	Fixing rail, center, right) rear door	1	)at roof frame,)center
-	000 988 35 78	Clamp (for rail at roof frame)	4	
42	10 120 695 05 35	Fixing rail, rear, left	1	)for fixing dome
43	10 120 695 06 35	Fixing rail, rear, right	1	)at roof frame,)rear
-	000 988 35 78	Clamp (for rail at roof frame)	4	
-	-	Lens-hd. screw S 3, 5x9, 5 DIN 7981 (for fixing rail at roof frame)	24	
45	10 120 690 00 50	Dome with bow	1	) state colour
46	10 120 690 02 50	Dome without bow	1	) when ordering)
47	10 120 696 01 01	Bow No. 1 from front end, 1290 mm long	1	
48	10 120 696 01 02	Bow No. 2 from front end, 1322 mm long	1	
49	10 120 696 01 03	Bow No. 3 and 4 from front end, 1335 mm long	2	
50	10 120 696 01 05	Bow No. 5 from front end, 1360 mm long	1	

Fig. No.	No. of spare part	Denomination	Quantity	Remarks
51	10 120 696 01 06	Bow No. 6 from front end, 1400 mm long	1	
52	10 120 696 01 07	Bow, rear over rear wall window	1	
53	000 987 09 32	Rubber hose 3200 mm long (for fixing dome in rail)	1	state length when ordering
54	10 120 695 00 40	Reinforcement (for dome, rear)	2	
56	10 180 698 01 81	Ornamental moulding (at rear part side, left)	1	
57	10 180 698 02 81	Ornamental moulding (at rear part side, right)	1	
58	10 180 690 00 71	Fixing screw	6	)
59	000 987 12 41	Rubber plate	6	) for ornamental moulding at rear part, side
60	000 987 13 41	Rubber plate	6	)
-	-	Washer A 4 DIN 9021	6	)
-	-	Hex. nut M 4 DIN 934-5 S	6	)
61	10 180 698 00 80	Ornamental moulding (on rear part behind board edge below rear wall window)	1	
62	10 180 888 00 71	Fixing screw	7	)
-	10 180 690 01 71	Fixing screw (separating joint)	2	) for ornamental moulding at rear part, rear
63	000 987 12 41	Rubber plate	9	)

Fig. No.	No. of spare part	Denomination	Quantity	Remarks
64	000 987 13 41	Rubber plate	9	) for ornamental moulding at rear part, rear
-	-	Washer A 4 DIN 9021	9	)
-	-	Hex. nut M 4 DIN 934-5 S	9	)
65	10 121 698 05 01	Drip moulding, side, front, left	1	
66	10 121 698 06 01	Drip moulding, side, front, right	1	
67	10 121 698 07 01	Drip moulding, side, rear, left	1	
68	10 121 698 08 01	Drip moulding, side, rear, right	1	
69	10 180 698 01 41	Shackle	2	)
-	-	Countersunk screw S 2, 6x6, 5 DIN 7972	2	) for drip moulding at roof
70	180 990 00 93	Lens-hd. rivet	8	)

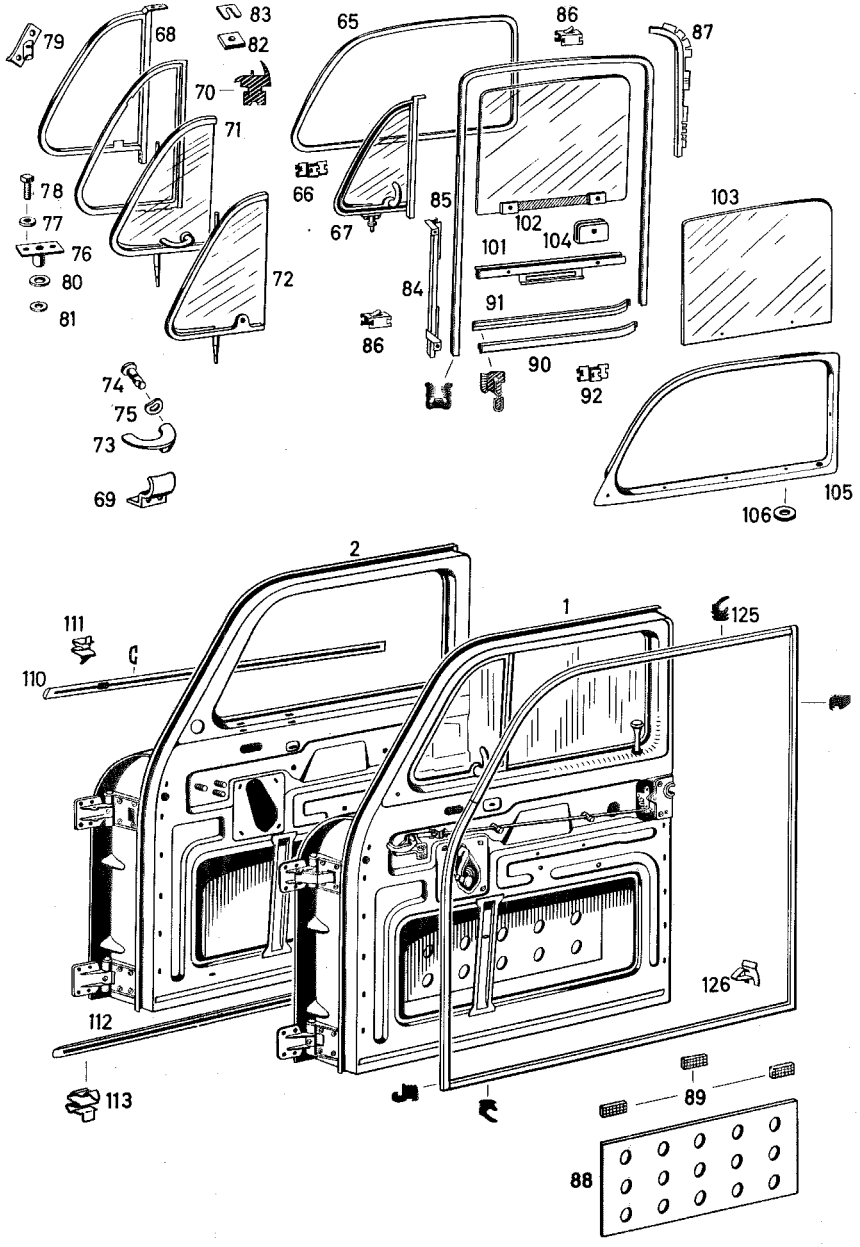
79
68
83
82
70
71
78
77
76
80
81
72
74
75
73
69
65
66
67
86
85
84
86
87
102
101
104
91
90
92
103
105
106
2
1
111
110
125
112
113
126
89
88

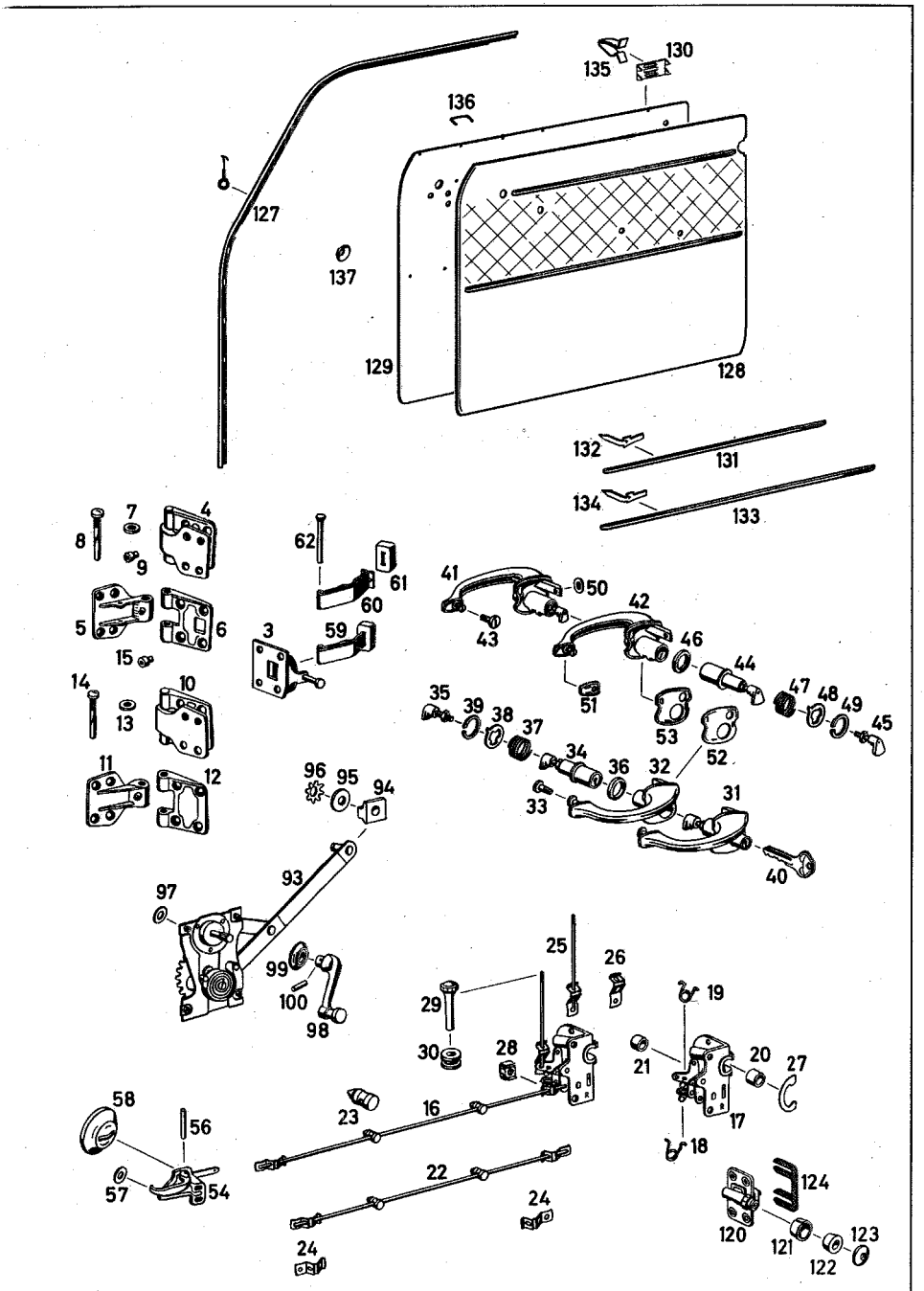
135
130
136
127
137
129
128
132
131
134
133
8
7
4
9
5
6
15
62
61
60
3
59
14
10
13
11
12
96
95
94
93
97
99
100
98
41
50
42
43
46
44
51
53
47
48
49
45
35
39
38
37
34
36
32
52
33
31
40
25
26
29
30
28
19
21
20
27
17
18
58
56
57
54
23
16
22
24
24
124
120
121
123
122

Fig. No.	No. of spare part	Denomination	Quantity	Remarks
-	10 121 720 01 02	Driver's door, left) with window and fittings, however, without door lining and without sealing frame, outside	1	
1	10 121 720 02 02	Driver's door, right)	1	
-	10 180 720 03 05	Driver's door, shell, left	1	)
2	10 180 720 04 05	Driver's door, shell, right	1	) with hinge
-	10 120 720 01 43	Door brake with threaded plate (for driver's door, left)	1	
3	10 120 720 02 43	Door brake with threaded plate (for driver's door, right)	1	
-	10 120 720 01 37	Hinge, top, left	1	
4	10 120 720 02 37	Hinge, top, right	1	
-	10 120 723 01 41	Hinge plate, front, left	1	)
5	10 120 723 02 41	Hinge plate, front, right	1	) at front wall
-	10 120 723 01 42	Hinge plate, rear, left	1	)
6	10 120 723 02 42	Hinge plate, rear, right	1	) at door
7	10 120 723 00 82	Washer	4	
8	10 120 723 00 52	Hinge pin	2	
9	000 997 04 88	Grease fitting	2	
-	-	Countersunk screw AM 8x20 DIN 7987 (for hinge, top at driver's door)	8	

10/024

Fig. No.	No. of spare part	Denomination	Quantity	Remarks
-	10 120 720 01 38	Hinge, bottom, left	1	
10	10 120 720 02 38	Hinge, bottom, right	1	
-	10 120 723 01 44	Hinge plate, front, left	1	)
11	10 120 723 02 44	Hinge plate, front, right	1	)at front wall)
-	10 120 723 01 45	Hinge plate, rear, left	1	
12	10 120 723 02 45	Hinge plate, rear, right	1	
13	10 120 723 00 82	Washer	4	
14	10 120 723 00 52	Hinge pin	2	
15	000 997 04 88	Grease fitting	2	
-	-	Countersunk screw AM 8x20 DIN 7987 (for hinge, bottom at driver' s door)	8	
-	10 180 720 19 35	Door lock, left (without locking rod) (for left driver' s door)	1	
16	10 180 720 22 35	Door lock, right (for right driver' s door)	1	
-	10 180 720 05 35	Door lock, left	1	
17	10 180 730 08 35	Door lock, right	1	
18	10 180 723 00 56	Torsion spring (at locking lever, bottom)	1	

Fig. No.	No. of spare part	Denomination	Quantity	Remarks
19	10 180 723 02 56	Torsion spring, right (at locking lever, top)	1	
20	10 180 723 00 78	Cup (for seating striker pin)	2	
21	000 766 00 35	Cap on plug	2	
22	10 180 720 04 92	Pull rod	2	
23	120 987 01 37	Linkage guide (rubber)	4	
24	10 180 723 00 55	Locking spring	4	
25	10 180 720 00 93	Locking rod	1	
26	10 180 723 00 55	Locking spring	1	
27	10 120 723 01 24	Cover plate (between lock and door lining)	2	
28	000 990 27 91	Cage clamp with spring stop nut	8	))
-	-	Countersunk screw AM 6x15 DIN 7987	4	)for door lock)at interior)panel
-	-	Lens-hd. countersunk screw AM 6x15 DIN 7988	4	))
29	10 120 766 02 58	Button (for door lock)	1	
30	000 997 42 81	Grommet (for leading through door lock)	1	

10/024

Fig. No.	No. of spare part	Denomination	Quantity	Remarks
31	10 180 766 03 01	Door handle, lockable (for left driver' s door)	1	
32	10 180 766 01 27	Handle, cast part (without push button and without cylindr. lock) (for left driver' s door)	1	
33	10 120 766 01 15	Fixing pin at handle, front	1	
34	10 180 766 03 26	Push button with cylindr. lock	1	
35	10 180 766 01 31	Button base with hex. nut	1	
36	10 180 766 00 99	Ring	1	)
37	10 180 766 00 29	Pressure spring, outside	1	)for push button
38	10 180 766 01 99	Grooved ring (spacer ring)	1	)in handle,)cast part
39	10 180 766 00 22	Square snap ring	1	)
-	-	Toothed washer J 6, 4 DIN 6797	1	
40	000 766 03 06	Key for door, trunk compartment and lid(rear mudguard)	2	
41	10 180 766 04 02	Door handle, right, not lockable (for right driver' s door)	1	
42	10 180 766 02 27	Handle, cast part (without push button) (for right driver' s door)	1	
43	10 120 766 01 15	Fixing pin (at handle, front)	1	

Fig. No.	No. of spare part	Denomination	Quantity	Remarks
44	10 180 766 04 26	Push button	1	
45	10 180 766 01 31	Button base with hex. nut	1	
46	10 180 766 00 99	Ring	1	)
47	10 180 766 00 29	Pressure spring, outside	1	) for push button
48	10 180 766 01 99	Grooved ring (spacer ring)	1	) in handle,) cast part)
49	10 180 766 00 22	Square snap ring	1	)
-	-	Toothed washer J 6,4 DIN 6797	1	
50	000 990 01 48	Lock washer	2	)
-	-	Lens-hd. screw AM 6x15 DIN 7985	2	))))
51	10 120 766 00 05	Rubber pad (for door handle, left and right, front)	2	))) for door handle) at door, outside)
52	10 120 766 03 05	Rubber pad (under door handle, left, rear)	1	)))
53	10 120 766 04 05	Rubber pad (under door handle, right, rear)	1	))
-	10 180 760 01 61	Inner handle, left (for left driver's door)	1	
54	10 180 760 02 61	Inner handle, right (for right driver's door)	1	
56	10 180 766 00 15	Pin (for handle lever at mounting plate)	2	
-	-	Lens-hd. screw AM 6x15 DIN 7985 (for inner handle at driver's door interior panel)	6	

Fig. No.	No. of spare part	Denomination	Quantity	Remarks
-	-	Toothed washer A 6,4 DIN 6797	6	)for inner handle)at driver' s door,
57	000 984 17 55	Washer	6	)interior panel
58	10 180 760 00 81	Rosette (for inner handle)	2	
59	10 120 720 03 16	Door arrester	2	
60	10 120 720 04 16	Door arrester	2	
61	000 987 41 40	Rubber buffer	2	
62	120 991 05 05	Door arresting pin	2	))for door arrester
-	-	Cotter pin 1, 5x10 DIN 94	2	)at hinge, top)front wall pillar
-	-	Lock washer B 5 DIN 137	2	)
-	10 180 725 03 55	Window frame (for driver' s door, left)	1	
65	10 180 725 04 55	Window frame (for driver' s door, right)	1	
66	000 988 32 78	Fixing clamp	6	))for window
-	-	Countersunk screw S 2, 9x6, 5 DIN 7982	14	)frame at door)
-	10 180 720 01 55	Deflector window, left	1	
67	10 180 720 02 55	Deflector window, right	1	
-	10 180 720 01 14	Fixing frame (for deflector window, left)	1	)) for rubber
68	10 180 720 02 14	Fixing frame (for deflector window, right)	1	)frame))

Fig. No.	No. of spare part	Denomination	Quantity	Remarks
69	10 180 725 03 48	Stop, chromium-plated (for latch)	2	
-	10 180 725 09 24	Sealing frame (for deflector window, left)	1	) for fixing frame
70	10 180 725 10 24	Sealing frame (for deflector window, right)	1	)
-	10 180 720 03 55	Deflector window, left	1	) without fixing and sealing frame with
71	10 180 720 04 55	Deflector window, right	1	) latch
-	10 180 720 05 55	Deflector window, left	1	) without latch
72	10 180 720 06 55	Deflector window, right	1	)
-	10 180 725 03 79	Latch (for deflector window, left)	1	
73	10 180 725 04 79	Latch (for deflector window, right)	1	
74	10 180 725 01 62	Shaft	2	)
75	000 990 02 48	Lock washer	2	) for latch at window frame
-	-	Grooved pin 2x14 DIN 1472	2	)
-	10 180 725 03 82	Support, bottom, left	1	
76	10 180 725 04 82	Support, bottom, right	1	
77	136 990 13 40	Shim	8	) for support at fixing frame, bottom
78	000 990 14 33	Square-hd. screw	4	)

Fig. No.	No. of spare part	Denomination	Quantity	Remarks
-	-	Washer A 5 DIN 9021	4	)
-	-	Lock washer B 5 DIN 137	4	)for support) at fixing frame,
-	-	Hex. nut M 5 DIN 934-5 S	4	)bottom)
-	10 180 725 03 80	Support, top, left	1	
79	10 180 725 04 80	Support, top, right	1	
-	-	Countersunk screw AM 4x6 DIN 7987 (for support, top, at fixing frame)	4	
80	000 990 01 48	Lock washer	8	) for deflector
81	000 984 25 56	Washer	2	) window at) support, bottom
-	-	Hex. nut M 6 DIN 934-5 S	4	)
82	10 180 725 00 18	Threaded plate	2	))
-	-	Lens-hd. countersunk screw AM 5x8 DIN 7988	2	))for deflector
83	10 180 725 00 84	Shim	a.r.	)window at)driver' s door)
-	-	Countersunk screw AM 5x10 DIN 7987	4	))
-	10 180 720 03 17	Window guide rail, left	1	)
84	10 180 720 04 17	Window guide rail, right	1	)hinge side)
-	-	Lens-hd. screw AM 6x12 DIN 7985 (for window guide rail at strut)	4	

Fig. No.	No. of spare part	Denomination	Quantity	Remarks
-	-	Toothed washer A 6,4 DIN 6797	4	)for window)guide rail
-	-	Washer A 6 DIN 9021	4	)at strut
85	000 985 07 30	Window guide rail, flexible 2000 mm long	2	state length when ordering
86	000 988 24 78	Fixing clamp (for window guide rail at driver's door)	8	
-	10 120 725 01 72	Sealing brush, left	1	)for driver's)door, lock
87	10 120 725 02 72	Sealing brush, right	1	)side
88	12 136 727 01 90	Damping (bitumen, cork felt cardboard)	2	
89	000 983 22 92	Intermediate layer (waffle felt)	10	state length and width when ordering
90	10 180 725 01 65	Seal, crank window outside, left and inside, right	2	
91	10 180 725 02 65	Seal, crank window outside, right and inside, left	2	
92	000 988 31 78	Fixing clamp (for seal at driver's door)	6	
-	10 180 725 03 02	Window lifter (for driver's door, left) (by Messrs. Brose)	1	))) optional with 10 180 725 05 02) and
93	10 180 725 04 02	Window lifter (for driver's door, right) (by Messrs. Brose)	1	) 10 180 725 06 02))

10/024

Fig. No.	No. of spare part	Denomination	Quantity	Remarks
-	10 180 725 05 02	Window lifter (for driver's door, left) (by Messrs. Keiper)	1	optional with 10 180 725 03 02 and 10 180 725 04 02
-	10 180 725 06 02	Window lifter (for driver's door, right) (by Messrs. Keiper)	1	
94	120 984 01 37	Sliding jaw	4	for window lifting rail at window lifter
95	000 984 24 56	Washer	2	
96	000 990 05 48	Lock washer	2	
-	-	Locking plate 7 DIN 6799	2	
-	-	Lens-hd. screw AM 6x10 DIN 7985	8	for window lifter at interior panel
97	000 994 05 10	Washer	8	
-	-	Lock washer B 6 DIN 127	8	
98	10 120 768 02 02	Window crank	2	
99	12 136 768 00 03	Rosette for crank	2	
100	12 136 768 00 15	Pin for crank	2	
101	10 180 720 03 45	Window lifting rail	2	
-	10 180 720 01 18	Crank window (for left driver's door)	1	
102	10 180 720 02 18	Crank window (for right driver's door)	1	
103	10 180 725 01 10	Glass pane	2	

Fig. No.	No. of spare part	Denomination	Quantity	Remarks
104	10 120 725 00 80	Rubber mounting	4	
-	000 983 06 10	Underlayer (felt, gray) 25x2x220 mm long	a.r.	state length when ordering
-	-	Lens-hd. screw AM 6x18 DIN 7985	4	) for glass pane) at window (lifting rail
-	-	Toothed washer A 6,4 DIN 6797	4	)
-	10 120 720 09 51	Window moulding (for driver's door, left)	1	
105	10 120 720 10 51	Window moulding (for driver's door, right)	1	
-	-	Lens-hd. screw S 3, 5x13 DIN 7981	14	) for window) moulding at) driver's door
106	000 987 29 41	Rubber plate	14	)
-	10 180 720 03 80	Ornamental moulding (at board edge, left)	1	
110	10 180 720 04 80	Ornamental moulding (at board edge, right)	1	
111	000 988 59 78	Clip	10	)
-	-	Button-hd. screw AM 4x8 DIN 7986	4	) for ornamental) moulding at) board edge)
-	-	Lock washer A 4 DIN 137	4	)
112	10 120 720 00 81	Ornamental moulding (at driver's door, bottom)	2	

Fig. No.	No. of spare part	Denomination	Quantity	Remarks
113	000 988 59 78	Clip (for ornamental moulding at driver's door, bottom)	14	
-	-	Countersunk screw AM 8x20 DIN 7987 (for driver's door at front wall pillar, top and bottom)	16	
-	10 180 720 07 04	Striker pin, left	1	
120	10 180 720 08 04	Striker pin, right	1	
121	10 180 723 02 99	Adjusting ring	2	
122	10 180 723 00 96	Rubber core	2	
123	10 180 723 00 76	Washer	2	
-	-	Lens-hd. countersunk screw AM 5x15 DIN 7988	2	
-	-	Washer V 5, 3 DIn 6798	2	
-	-	Countersunk screw AM 6x15 DIN 7987	8	)
124	10 120 723 02 05	Shim)	a.r.	)for striker pin
-	10 120 723 03 05	Shim) optional	a.r.	)at center pillar)
-	10 120 723 04 05	Shim)	a.r.	)
-	10 120 720 01 78	Seal (for driver's door, left)	1	
125	10 120 720 02 78	Seal (for driver's door, right)	1	

Fig. No.	No. of spare part	Denomination	Quantity	Remarks
126	000 988 51 78	Fixing clamp (for seal at driver's door)	2	
-	10 120 727 01 93	Draft excluder, front, left	1	)state colour)and body No.
127	10 120 727 02 93	Draft excluder, front, right	1	)when ordering
-	-	Nails A 14 x 10 N 46	10	)
-	-	Countersunk screw Z 2, 9x9, 5 DIN 7982	2	)for draft excluder at front)wall and roof)frame)
-	000 985 05 62	Countersunk washer, chrom. -plated	2	)
-	10 121 720 01 70	Door lining (for driver's door, left)	1	))state colour)and body No.
128	10 121 720 02 70	Door lining (for driver's door, right)	1	)when ordering)
-	10 121 720 01 73	Reinforcement, left	1	
129	10 121 720 02 73	Reinforcement, right	1	
130	136 984 01 60	Clip, lower part (for fixing door lining)	22	
131	10 121 727 01 82	Ornamental moulding, interior top (at door lining of driver's door)	2	
132	000 988 41 78	Clip	14	)for ornamental)moulding,
-	-	Washer A 3 DIN 9021	4	)interior, top)at door lining
133	10 121 727 02 82	Ornamental moulding, interior top (at door lining of driver's door)	2	

Fig. No.	No. of spare part	Denomination	Quantity	Remarks
134	000 988 41 78	Clip	16	for ornamental moulding,
-	-	Washer A 3 DIN 9021	4	interior, bottom at door lining
135	000 988 61 78	Clip, upper part (for fixing door lining)	22	
-	000 988 44 78	Fixing clamp 10 x 1, 5	60	for cover at reinforcement
136	000 988 37 78	Fixing clamp 10 x 2, 5	35	
-	-	Lens-hd. countersunk screw S 2, 9x13 DIN 7983 chromium-plated	2	for door lining at driver's door
137	000 985 05 62	Countersunk washer	2	

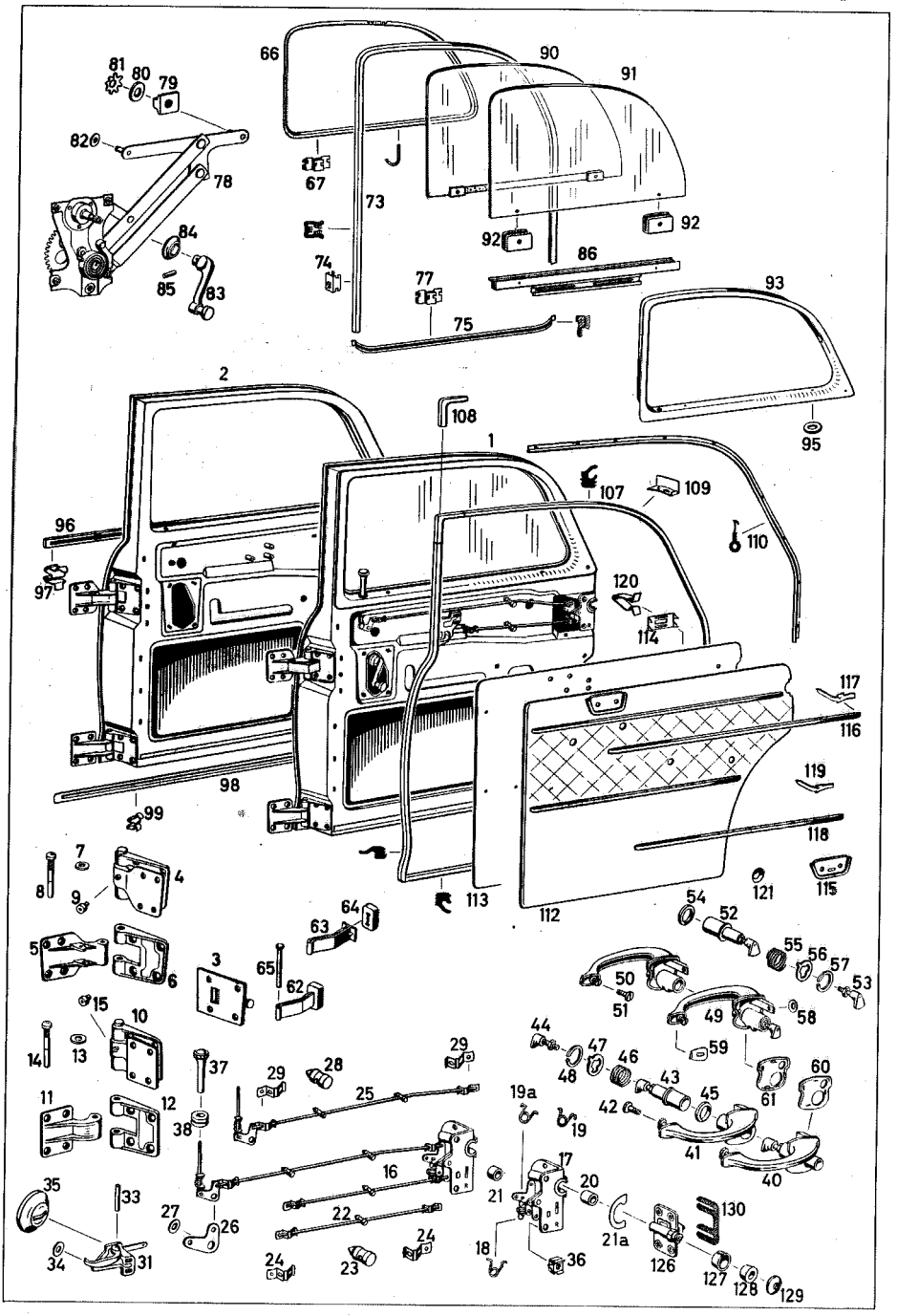
81
80
79
820
78
84
85
83
66
67
73
74
77
75
90
91
92
92
86
93
95
2
108
1
107
109
110
96
97
120
114
117
116
119
98
99
118
121
115
7
8
9
4
5
6
3
63
64
65
62
112
113
54
52
55
56
57
53
50
51
49
58
59
60
61
44
47
48
46
43
45
42
41
40
15
10
14
13
11
12
37
38
29
28
25
29
16
22
24
23
24
27
26
35
33
34
31
19a
19
17
20
21
18
36
21a
130
126
127
128
129

Fig. No.	No. of spare part	Denomination	Quantity	Remarks
		REAR DOOR		
-	10 121 730 01 02	Rear door, left	1	)with window)and fittings,)however, with-
1	10 121 730 02 02	Rear door, right	1	)out seal at out-)side and without)door lining
-	10 121 730 01 05	Rear door, shell, left	1	))with hinge
2	10 121 730 02 05	Rear door, shell, right	1	)
-	10 120 730 01 43	Door brake with threaded plate (for rear door, left)	1	
3	10 120 730 02 43	Door brake with threaded plate (for rear door, right)	1	
-	10 120 730 01 37	Hinge, top, left	1	
4	10 120 730 02 37	Hinge, top, right	1	
-	10 120 733 01 41	Hinge plate, front, left	1	))at pillar
5	10 120 733 02 41	Hinge plate, front, right	1	)
-	10 120 733 01 42	Hinge plate, rear, left	1	))at door
6	10 120 733 02 42	Hinge plate, rear, right	1	)
7	10 120 723 00 82	Washer	4	
8	10 120 723 00 52	Hinge pin	2	
9	000 997 04 88	Grease fitting	2	

Fig. No.	No. of spare part	Denomination	Quantity	Remarks
-	-	Countersunk screw AM 8x20 DIN 7987 (for hinge, top at rear door)	8	
-	10 120 730 01 38	Hinge, bottom, left	1	
10	10 120 730 02 38	Hinge, bottom, right	1	
-	10 120 733 01 44	Hinge plate, front, left	1	))at pillar
11	10 120 733 02 44	Hinge plate, front, right	1	)
-	10 120 733 01 45	Hinge plate, rear, left	1	))at door
12	10 120 733 02 45	Hinge plate, rear, right	1	)
13	10 120 723 00 82	Washer	4	
14	10 120 723 00 52	Hinge pin	2	
15	000 997 04 88	Grease fitting	2	
-	-	Countersunk screw AM 8x20 DIN 7987 (for hinge, bottom at rear door)	8	
-	10 120 730 13 35	Door lock, left (for left rear door)	1	
16	10 120 730 14 35	Door lock, right (for right rear door)	1	
-	10 180 730 07 35	Door lock, left	1	
17	10 180 730 08 35	Door lock, right	1	
18	10 180 723 00 56	Torsion spring (at locking lever, bottom)	2	

Fig. No.	No. of spare part	Denomination	Quantity	Remarks
19	10 180 723 01 56	Torsion spring, left (at locking lever, top)	1	
19a	10 180 723 02 56	Torsion spring, right (at locking lever, top)	1	
20	10 180 723 00 78	Cup (for seating striker pin)	2	
21	000 766 00 35	Cap on plug	2	
21a	10 120 723 01 24	Cover plate (between lock and door lining)	2	
22	10 120 730 05 92	Pull rod (from inner handle to lock)	2	
23	120 987 01 37	Linkage guide (rubber)	2	
24	10 180 723 00 55	Locking spring	4	
-	10 120 730 05 93	Locking rod, left (for left rear door)	1	
25	10 120 730 06 93	Locking rod, right (for right rear door)	1	
26	10 180 733 00 18	Elbow lever	2	
-	-	Lens-hd. screw M 6x4 DIN 923	2	
27	10 180 733 00 13	Washer	2	
-	-	Toothed washer J 6,4 DIN 6797	2	

Fig. No.	No. of spare part	Denomination	Quantity	Remarks
28	120 987 01 37	Linkage guide	4	
29	10 180 723 00 55	Locking spring	6	
-	10 180 760 01 61	Inner handle, left (for right rear door)	1	
31	10 180 760 02 61	Inner handle, right (for left rear door)	1	
33	10 180 766 00 15	Pin (for handle at mounting plate)	2	
-	-	Lens-hd. screw AM 6x15 DIN 7985	6	))for inner handle)at driver's
-	-	Toothed washer A 6,4 DIN 6797	6	)door, interior)panel
34	000 984 17 55	Washer	6	)
35	10 180 760 00 81	Rosette (for inner handle)	2	
36	000 990 27 91	Cage clamp with spring stop nut	8	)))
-	-	Countersunk screw AM 6x15 DIN 7987	4	)for door lock)at interior)panel
-	-	Lens-hd. countersunk screw AM 6x15 DIN 7988	4	))
37	10 120 766 02 58	Button (for door lock)	2	
38	000 997 42 81	Grommet (for button at locking rod)	2	

Fig. No.	No. of spare part	Denomination	Quantity	Remarks
40	10 180 766 03 02	Door handle, left, not lockable (for left rear door)	1	
41	10 180 766 01 27	Handle, cast part (without push button)	1	
42	10 120 766 01 15	Fixing pin (at handle, front)	1	
43	10 180 766 04 26	Push button	1	
44	10 180 766 01 31	Button base with hex. nut	1	
45	10 180 766 00 99	Ring	1	)
46	10 180 766 00 29	Pressure spring, outside	1	) for push button) in handle,) cast part
47	10 180 766 01 99	Grooved ring (spacer ring)	1	)
48	10 180 766 00 22	Square snap ring	1	)
-	-	Toothed washer J 6,4 DIN 6797 (under hex. nut, button base)	1	
49	10 180 766 04 02	Door handle, right, not lockable (for right rear door)	1	
50	10 180 766 02 27	Handle, cast part (without push button)	1	
51	10 120 766 01 15	Fixing pin (at handle, front)	1	
52	10 180 766 04 26	Push button	1	

Fig. No.	No. of spare part	Denomination	Quantity	Remarks
53	10 180 766 01 31	Button base with hex. nut	1	
54	10 180 766 00 99	Ring	1	
55	10 180 766 00 29	Pressure spring, outside	1	
56	10 180 766 01 99	Grooved ring(spacer ring)	1	
57	10 180 766 00 22	Square snap ring	1	
-	-	Toothed washer J 6,4 DIN 6797 (under hex. nut, button base)	1	
58	000 990 01 48	Washer	2	))for door handle
-	-	Lens-hd. screw AM 6x15 DIN 7985	2	)at rear door)
59	10 120 766 00 05	Rubber pad (for door handle, left and right, front)	2	
60	10 120 766 03 05	Rubber pad (for door handle, left, rear)	1	
61	10 120 766 04 05	Rubber pad (for door handle, right, rear)	1	
62	10 120 730 03 16	Door arrester	2	
63	10 120 730 04 16	Door arrester	2	
64	000 987 41 40	Rubber buffer	2	
65	120 991 05 05	Pin (for door arrester at hinge, top, pillar)	2	

Fig. No.	No. of spare part	Denomination	Quantity	Remarks
-	-	Cotter pin 1, 5x10 DIN 94	2	)for door arrester
-	-	Lock washer B 5 DIN 137	2	) at hinge, top,) pillar
-	10 120 735 01 55	Window frame (for left rear door)	1	
66	10 120 735 02 55	Window frame (for right rear door)	1	
67	000 988 32 78	Fixing clamp	8	) for window) frame at rear) door)
-	-	Countersunk screw S 2, 9x6, 5 DIN 7982	12	
73	000 985 07 30	Window guide rail, flexible 1760 mm long	2	state length when ordering
74	000 988 24 78	Fixing clamp (for window guide rail at rear door)	16	
75	10 120 735 00 65	Sealing rail, crank window outside and inside	4	
77	000 988 31 78	Fixing clamp (for sealing rail at rear door)	8	
-	10 120 735 09 02	Window lifter, left) (by Messrs. Brose))to be op-)tionally	1	)))with swing
78	10 120 735 10 02	Window lifter, right)used with (by Messrs. Brose)) make Keiper	1	) joint)
-	10 120 735 11 02	Window lifter, left) (by Messrs. Keiper)) to be op-) tionally	1	
-	10 120 735 12 02	Window lifter, right) (by Messrs. Keiper)) used with make Brose	1	

Fig. No.	No. of spare part	Denomination	Quantity	Remarks
79	120 984 01 37	Sliding jaw	4	)
80	000 984 24 56	Washer	4	) for window lifting rail
81	000 990 05 48	Lock washer	4	) at window lifter
-	-	Locking plate 7 DIN 6799	4	)
-	-	Lens-hd. screw AM 6x10 DIN 7985	8	)
82	000 994 05 10	Washer	8	) for window lifter at interior panel
-	-	Lock washer B 6 DIN 127	8	)
83	10 120 768 02 02	Window crank	2	
84	12 136 768 00 03	Rosette) for window crank	2	
85	12 136 768 00 15	Pin)	2	
86	10 120 720 00 45	Window lifting rail	2	
-	10 120 730 01 18	Crank window, left	1	
90	10 120 730 02 18	Crank window, right	1	
91	10 120 735 01 10	Glass pane, left and right	2	
92	10 120 725 00 80	Rubber mounting	4	
-	000 983 06 10	Underlayer (felt) 25x2x460 mm long	2	state length when ordering
-	-	Lens-hd. screw AM 6x18 DIN 7985	4	) for glass pane at window lifting rail
-	-	Toothed washer A 6,4 DIN 6797	4	)

10/024

Fig. No.	No. of spare part	Denomination	Quantity	Remarks
-	10 120 730 01 51	Window moulding (for rear door, left)	1	
93	10 120 730 02 51	Window moulding (for rear door, right)	1	
-	-	Lens-hd. screw S 3, 5x13 DIN 7981 chrom.-plat.	12	) for window moulding at rear door
-	-	Lens-hd. screw S 3, 5x9, 5 DIN 7981 chrom.-plat.	2	)
95	000 987 29 41	Rubber plate	14	)
-	10 121 730 01 80	Ornamental moulding (at ledge, left)	1	for left rear door
96	10 121 730 02 80	Ornamental moulding (at ledge, right)	1	for right rear door
97	000 988 59 78	Clip	10	) for ornamental moulding at ledge, rear door
-	-	Button-hd. screw AM 4x8 DIN 7986	4	)
-	-	Lock washer A 4 DIN 137	4	)
98	10 120 730 00 81	Ornamental moulding (at rear door, bottom)	2	
99	000 988 59 78	Clip (for ornamental moulding at rear door, bottom)	10	
-	-	Countersunk screw AM 8x20 DIN 7987 (for rear door, shell at center pillar, top and bottom)	16	

Fig. No.	No. of spare part	Denomination	Quantity	Remarks
-	10 120 730 01 78	Seal (outside, at left rear door)	1	
107	10 120 730 02 78	Seal (outside, at right rear door)	1	
-	10 120 737 01 30	Filler, left	1	pasted into seal
108	10 120 737 02 30	Filler, right	1	pasted into seal
109	000 988 39 78	Fixing clamp (for seal at rear door)	14	
-	12 136 727 01 90	Damping (for door, outer panel)	2	
-	000 983 23 92	Intermediate layer waffle felt 15 mm thick 25 x 60	6	state thickness, length and width when ordering
-	000 983 22 92	Intermediate layer waffle felt 10 mm thick 25 x 60	4	state thickness, length and width when ordering
-	10 120 737 01 93	Draft excluder, rear, left	1	state colour and body No. when ordering
110	10 120 737 02 93	Draft excluder, rear, right	1	state colour and body No. when ordering
-	-	Nails A 14 x 10 N 46 (for draft excluder at roof frame, rear)	4	
-	10 121 730 01 70	Door lining (for rear door, left)	1	state colour and body No. when ordering
112	10 121 730 02 70	Door lining (for rear door, right)	1	state colour and body No. when ordering
-	10 121 730 01 73	Reinforcement, left	1	

10/024

Fig. No.	No. of spare part	Denomination	Quantity	Remarks
113	10 121 730 02 73	Reinforcement, right	1	
114	136 984 01 60	Clip, lower part	20	
115	10 180 813 00 33	Base plate (for ash-tray)	2	
116	10 121 737 00 82	Ornamental moulding (for rear door, interior, top)	2	
117	000 988 41 78	Clip	14	)for ornamental
-	-	Washer A 3 DIN 9021	4	)moulding, inter.)top at door lining
118	10 121 737 01 82	Ornamental moulding (for rear door, interior, bottom)	2	
119	000 988 41 78	Clip	14	)for ornamental
-	-	Washer A 3 DIN 9021	4	)moulding, inter.)bottom at door lining
120	000 988 61 78	Clip, upper part	20	
-	-	Lens-hd. countersunk screw S 2,9x13 DIN 7983, chrom.-plated	4	))for door) lining at rear
121	000 985 05 62	Countersunk washer	4	) door
-	10 180 720 07 04	Locking pin, left	1	
126	10 180 720 08 04	Locking pin, right	1	
127	10 180 723 02 99	Adjusting ring	2	
128	10 180 723 00 96	Rubber core	2	
-	-	Lens-hd. countersunk screw AM 5x15 DIN 7988	2	

Fig. No.	No. of spare part	Denomination	Quantity	Remarks
-	-	Toothed washer V 5, 3 DIN 6798	2	
129	10 180 723 00 76	Washer	2	
130	10 120 723 02 05	Shim)	a.r.)	)
		)		)
-	10 120 723 03 05	Shim) optional	a.r.)	for locking
		)		) pin at rear
-	10 120 723 04 05	Shim)	a.r.)	part
				)
-	-	Countersunk AM 6x15 DIN 7987	8)	)
				)

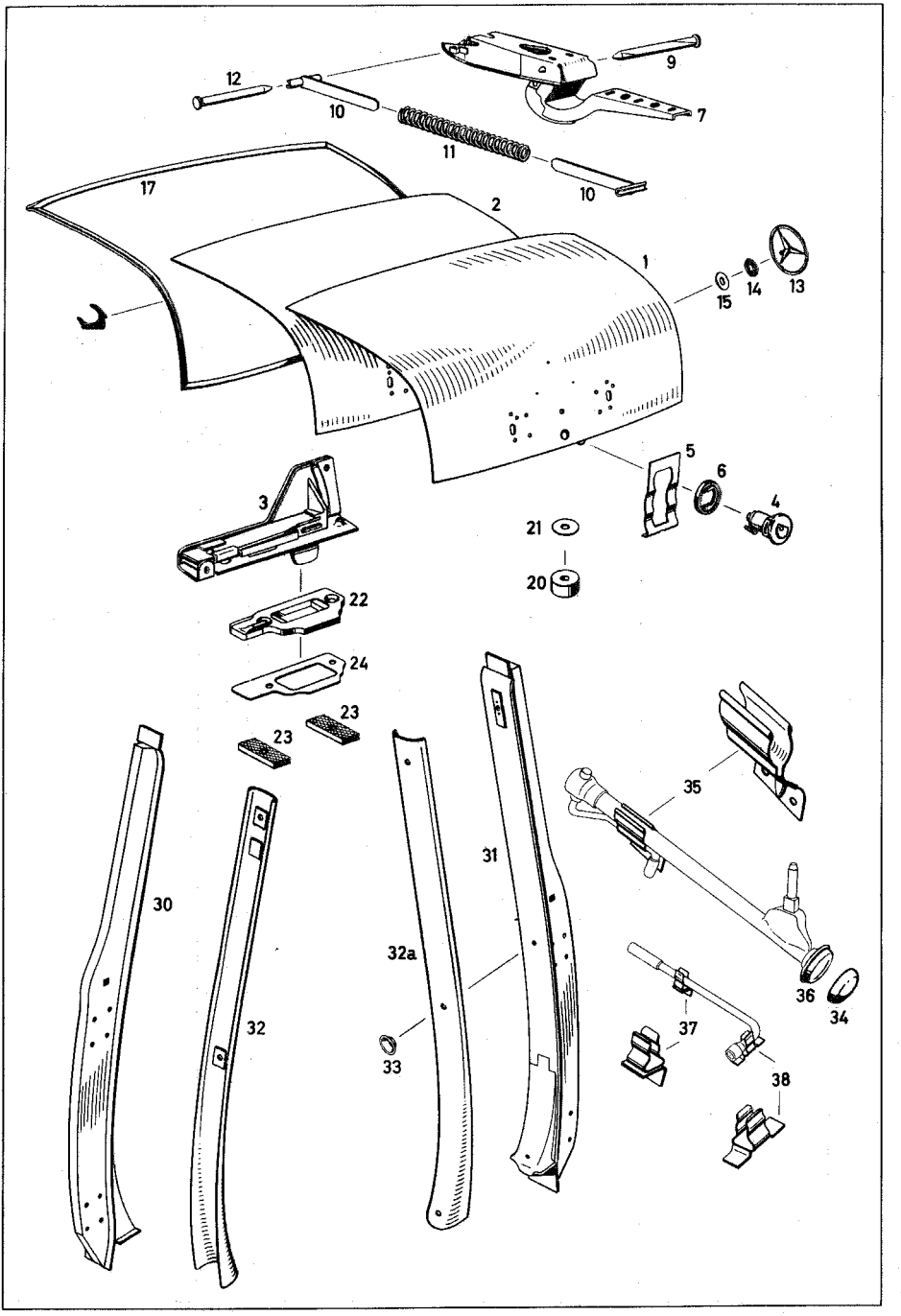
12
10
9
7
11
10
17
2
1
15
14
13
5
6
4
3
21
20
22
24
23
23
30
32
31
32a
33
35
36
34
37
38

Fig. No.	No. of spare part	Denomination	Quantity	Remarks
		REAR LID		
1	10 120 750 05 75	Rear lid, shell (with lock)	1	
2	10 120 750 00 75	Rear lid, shell (without fittings)	1	
3	10 120 750 01 85	Lock (for rear lid)	1	
-	-	Lens-hd. countersunk screw AM 6x10 DIN 7988	1	) for lock at rear lid
-	-	Lens-hd. countersunk screw AM 6x8 DIN 7988	2	) for lock at rear lid
-	-	Toothed washer V 6,4 DIN 6797	3	) for lock at rear lid
4	10 120 750 00 84	Lock (for rear lid)	1	lock same as with door handle
5	000 994 01 21	Locking plate (for lock at rear lid)	1	
6	000 987 19 41	Rubber plate (for intermediate layer, lock, rear lid)	1	
7	10 120 750 04 87	Rear lid hinge left and right with pressure spring	2	
9	10 120 758 00 15	Pin	2	
10	10 120 750 01 23	Thrust rod (for pressure spring guide, front)	4	

Fig. No.	No. of spare part	Denomination	Quantity	Remarks
11	10 120 758 01 27	Pressure spring	2	
12	10 120 758 02 15	Pin	2	
-	-	Hex.-hd. screw S 6, 3x22 DIN 7976	6	) for hinge at rear lid
-	000 990 08 48	Lock washer	6	)
-	000 994 12 45	Nut	6	)
13	10 120 750 00 79	Mercedes star on rear lid	1	
14	000 987 01 41	Rubber plate	1	) for Mercedes star at rear lid
15	153 990 06 40	Washer	1	)
-	-	Hex. nut M 8 DIN 934-5 S	1	)
17	10 120 750 00 77	Seal (for rear lid)	1	
20	000 987 88 40	Rubber buffer for rear lid	2	
-	-	Lens-hd. screw S 4, 8x16 DIN 7981	2	) for rubber buffer at rear lid
-	-	Washer 5,3 DIN 125 without bevel	2	)
21	187 990 12 40	Washer	a.r.	)
-	-	Hex.-hd. screw M 6x15 DIN 933-8 G	6	) for rear lid at rear part
-	-	Lock washer B 6 DIN 127	6	)
-	-	Washer A 6 DIN 9021	6	)

Fig. No.	No. of spare part	Denomination	Quantity	Remarks
22	10 120 758 00 03	Striker (for rear lid)	1	
-	-	Lens-hd. countersunk screw AM 6x15 DIN 7988	2	) for striker at rear part
-	-	Toothed washer V 6,4 DIN 6797	2	)
23	10 120 647 00 37	Threaded plate	2	)
24	10 120 758 03 90	Washer	a.r.	)
30	10 120 760 03 10	Center pillar, left	1	
31	10 120 760 04 10	Center pillar, right	1	
32	10 120 760 05 19	Cover rail, left	1	) state colour of cover and body No. when ordering
32a	10 120 760 06 19	Cover rail, right	1	)
-	-	Lens-hd. countersunk screw S 3, 9x13 DIN 7983 chrom.-plated	6	) for cover rail at center pillar
33	000 985 06 62	Countersunk washer	6	)
34	10 120 899 00 21	Mounting cup for car jack (at rear floor, rear, right)	1	
35	10 120 890 00 92	Bracket for car jack	1	
-	-	Lens-hd. screw AM 6x10 DIN 7985	2	) for bracket at rear part, inner panel
-	-	Lock washer B 6 DIN 127	2	)
36	10 120 899 00 97	Rubber underlayer for car jack (mounting cup)	1	

10/024

Fig. No.	No. of spare part	Denomination	Quantity	Remarks
37	10 120 890 01 10	Bracket (for car jack wrench, front) (right in rear compartment)	1	see also group 64 fig. No. 91 a
38	10 120 890 00 10	Bracket (for car jack wrench, rear) (right at floor frame in rear part)	1	see also group 61 fig. No. 59 a

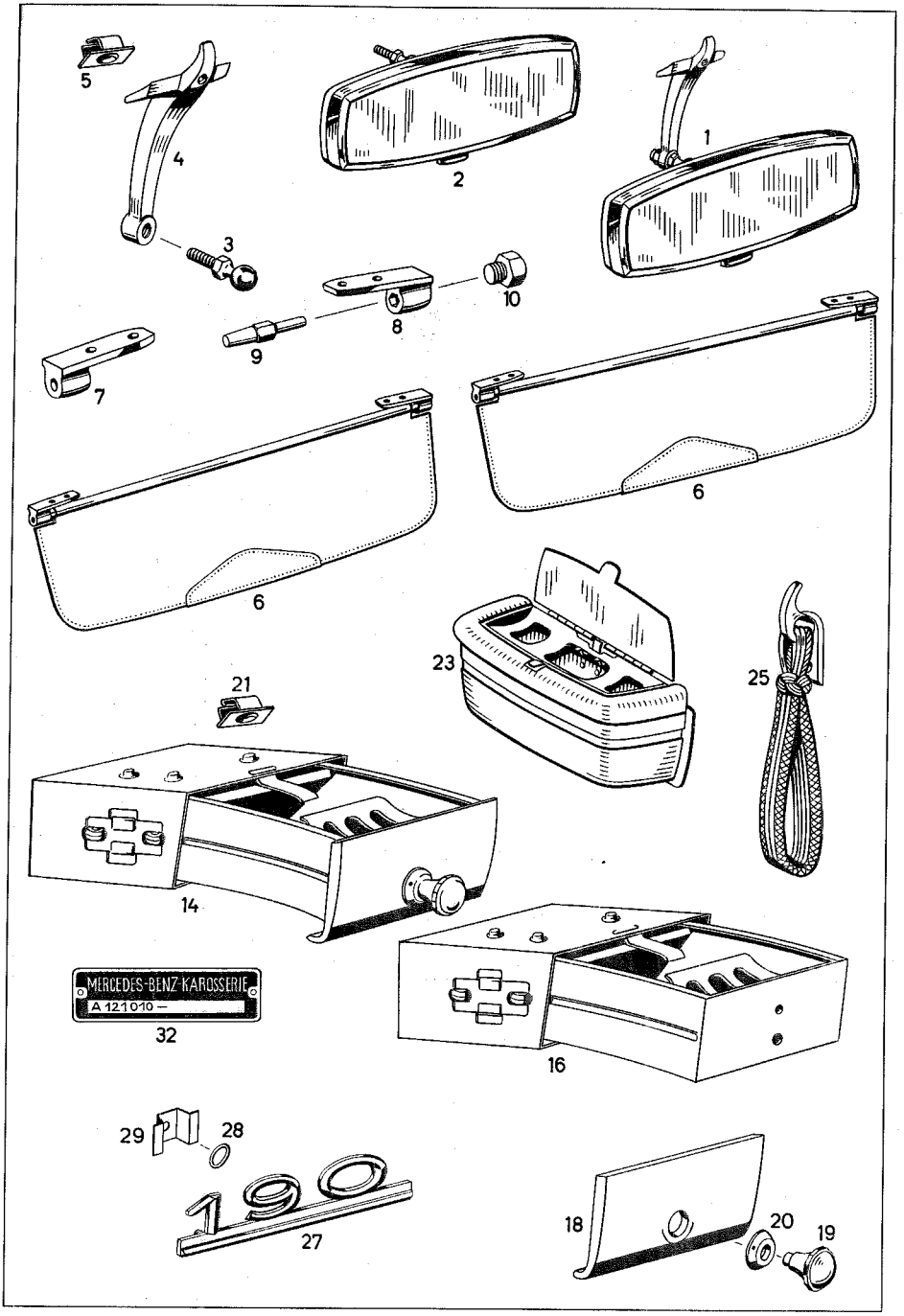
5
4
3
2
1
10
8
9
7
6
6
23
25
21
14
MERCEDES-BENZ-KAROSSERIE
A 121 010 –
32
16
29
28
190
27
18
20
19

Fig. No.	No. of spare part	Denomination	Quantity	Remarks
		REAR VIEW MIRROR		
1	10 180 810 01 17	Rear view mirror, not dazzling	1	
2	40 186 810 00 09	Rear view mirror, not dazzling with ball pin, without mirror base	1	
3	000 811 00 68	Ball pin (for adjusting mirror)	1	
4	10 120 811 01 25	Base (for rear view mirror)	1	
-	-	Lens-hd. countersunk screw S 4, 2x32 DIN 7983	3	) for rear view mirror at front wall, inner
5	000 994 13 45	Nut	3	)
6	10 120 810 05 10	Sun vizor	2	state colour of interior lining and body No. when ordering
7	10 120 811 00 41	Bracket, outside chrom.-plated	2	
8	10 120 811 00 52	Bracket, inside chrom.-plated	2	
9	10 191 811 00 15	Conical pin, chrom.-plated	2	
10	10 191 811 00 42	Pressure screw, chrom.-plated	2	
-	-	Lens-hd. countersunk screw S 4, 2x16 DIN 7983 chrom.-plated	8	) for sun vizor at front wall
-	000 994 13 45	Nut	8	)

Fig. No.	No. of spare part	Denomination	Quantity	Remarks
14	10 121 810 01 30	Ash-tray (with roller guide)	1	
-	10 120 810 19 30	Ash-tray)) optional	1	) up to chassis) No. 65 00769
-	10 120 810 03 30	Ash-tray)	1	)
16	10 121 810 00 30	Pull-type ash tray (with roller guide)	1	from chassis No. 65 00770
18	10 120 813 04 33	Plate for ash tray	1	
-	-	Toothed washer A 3,2 DIN 6797	1	) for plate
-	-	Button-hd. screw AM 3 x 5 DIN 7986	1	) at ash tray)
-	-	Button-hd. screw AM 3 x 8 DIN 7986 (for plate at ash tray)	1	up to chassis No. 65 00769
19	120 545 02 37	Button	1	
20	120 545 00 72	Rosette	1	
-	-	Toothed washer A 4,3 DIN 6797	1	) for button and
-	-	Button-hd. screw AM 4x20 DIN 7986	1	) rosette at) ash tray)
-	-	Countersunk screw S 3,9x13 DIN 7982	3	) for ash tray) at front wall)
21	000 994 13 45	Nut	3	)
23	10 180 810 00 30	Ash tray (for rear door)	2	

Fig. No.	No. of spare part	Denomination	Quantity	Remarks
25	10 120 810 05 57	Gripping strap	2	state colour when ordering
-	-	Lens-hd. countersunk screw AM 4x12 DIN 7988 chrom.-plated (for gripping strap at center pillar)	4	
27	10 121 817 00 15	Type plate (for rear lid)	1	
28	000 997 11 41	Sealing ring	2	) for type plate at rear lid
29	136 403 03 02	Fixing clamp	2	) for type plate at rear lid
-	-	Lens-hd. screw AM 3 x 8 DIN 7985	2	) for type plate at rear lid
32	10 121 817 00 26	Body number plate	1	
-	-	Lens-hd. screw S 2, 9x6, 5 DIN 7981 chrom.-plated (for body number plate at front wall pillar)	2	

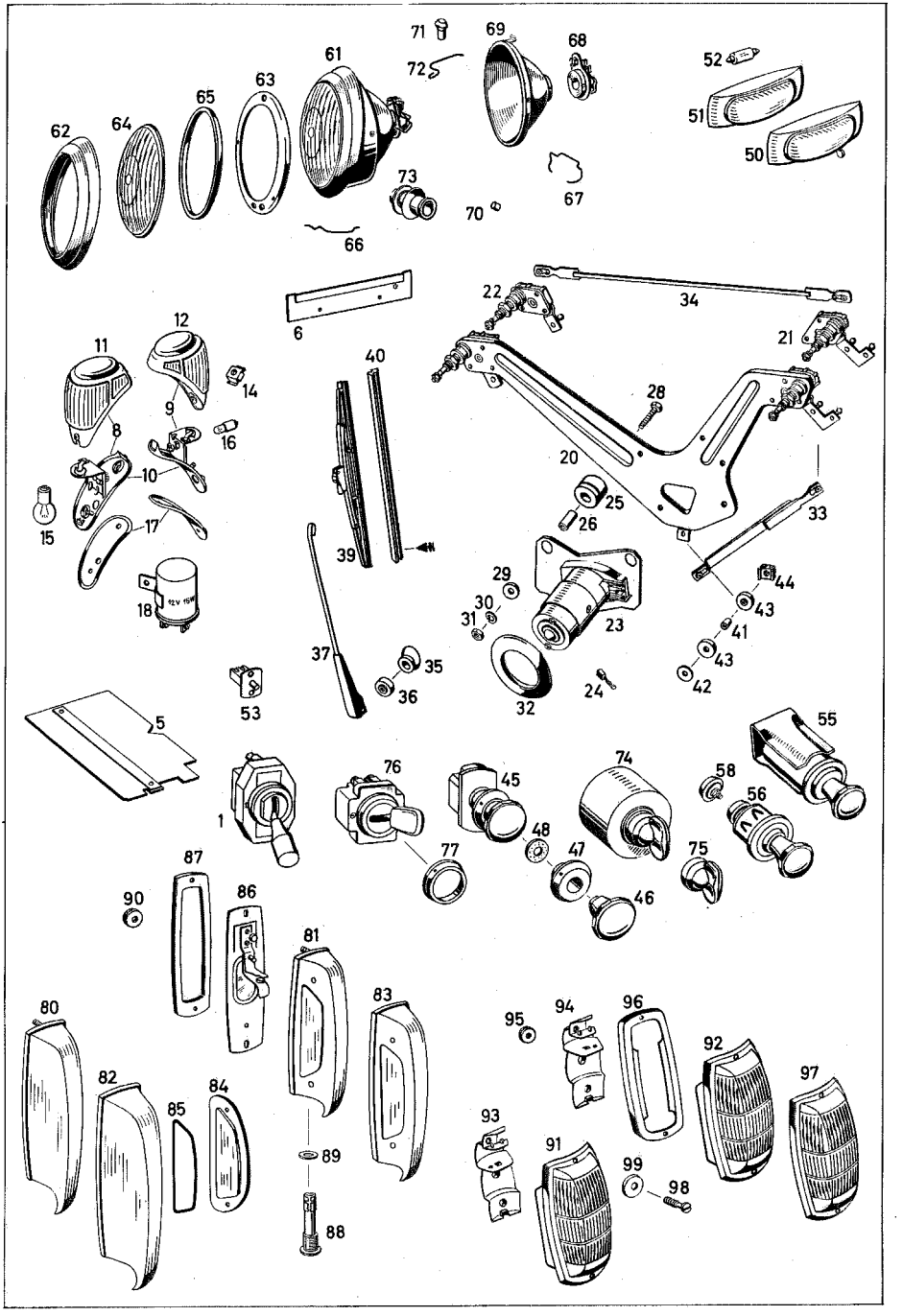
71
72
69
68
61
63
65
64
62
73
70
67
66
52
51
50
6
22
34
21
12
11
14
9
16
8
10
15
17
18
40
39
28
20
25
26
33
29
30
31
23
44
43
41
43
42
37
35
36
24
32
53
5
1
76
77
45
48
47
46
74
58
56
55
75
87
90
86
81
83
80
82
85
84
89
88
95
94
96
92
97
93
91
99
98

Fig. No.	No. of spare part	Denomination	Quantity	Remarks
		ELECTRIC SYSTEM		
1	000 821 00 51	Toggle switch for blower	1	
5	10 120 820 01 12	Cable covering (behind fixing plate for control buttons)	1	
6	40 121 820 00 13	Cover plate (for fuse box)	1	
		BLINKER		
8	120 540 00 95	Blinker with parking light, left	1	
9	120 540 01 95	Blinker with parking light, right	1	
10	120 544 00 31	Base plate with lamp socket, left and right	2	
11	120 544 00 95	Housing with glass, left	1	
12	120 544 01 95	Housing with glass, right	1	
-	-	Lens-hd. countersunk screw AM 4x8 DIN 7988 chrom.-plated	2	
14	000 990 22 91	Square cage nut	4	))for blinker at
-	-	Lens-hd. countersunk screw AM 6x15 DIN 7988	4	)front mudguard)

Fig. No.	No. of spare part	Denomination	Quantity	Remarks
15	000 544 13 94	Bulb 12 V 15 W (for blinker)	2	
16	-	Bulb H 12 V 2 W DIN 72601 (for parking light)	2	
17	120 544 00 26	Rubber pad (for blinker at front mudguard)	2	
18	000 544 30 32	Blinker	1	
		WINDSCREEN WIPER SYSTEM		
20	10 120 820 17 43	Plate with gear, left and right (for windscreen wiper)	1	
-	10 120 820 10 43	Plate (for wiper motor and rods)	1	
21	10 120 824 13 07	Gear, left with wiper shaft	1	
22	10 120 824 14 07	Gear, right with wiper shaft	1	
-	-	Button-hd. rivet 3x8 DIN 660 (for gear at plate)	6	
23	10 121 824 00 01	Motor with crank 12 V	1	
-	000 824 00 71	Helical spring (for carbon brush)	2	
24	000 824 05 75	Carbon brush	2	
25	10 121 824 00 96	Rubber buffer	3	

Fig. No.	No. of spare part	Denomination	Quantity	Remarks
26	10 121 824 00 83	Spacer ring	3	)
				)
28	-	He.x.-hd. screw M 6x30 DIN 933	3	)
				)
				)for motor
29	000 984 03 55	Washer	3	)at plate
				)
30	-	Lock washer B 6 DIN 127	3	)
				)
31	-	Hex. nut M 6 DIN 934-5 S	3	)
32	10 120 824 01 23	Sleeve (over wiper motor)	1	
33	10 120 824 04 06	Drive rod (from motor to left gear crank)	1	
34	10 120 824 05 05	Coupling rod (from gear, left to gear, right)	1	)
				)
				)optional
-	10 120 824 03 05	Coupling rod (from gear, left to gear, right)	1	)
				)
35	10 120 824 00 98	Sealing rubber (on shaft between cap and cowl)	2	
36	10 120 824 02 99	Cap (over sealing rubber on wiper shaft)	2	
37	10 120 824 03 28	Wiper arm	2	
39	10 120 824 01 26	Wiper blade	2	

Fig. No.	No. of spare part	Denomination	Quantity	Remarks
40	000 824 00 27	Profile rubber, 260 mm long	2	take off length as required
-	-	Hex.-hd. screw M 6x22 DIN 933	1	)))
-	-	Lock washer B 6 DIN 127	1	))
41	120 991 19 40	Spacer tube	1	)
42	000 984 03 55	Washer	1	)for windscreen)wiper at cowl)
43	000 987 69 40	Rubber buffer	2	))
44	000 990 22 91	Square cage nut	1	)
45	120 540 00 44	Push-pull switch (for windscreen wiper)	1	
46	120 545 02 37	Button	1	
47	120 545 00 72	Rosette	1	
48	000 997 20 40	Felt ring	1	
		INTERIOR LIGHTING		
50	10 120 820 00 01	Dome light with switch	1	
51	10 120 825 00 09	Housing	1	
52	-	Bulb K 12 V 10 W DIN 72601	1	
-	-	Countersunk screw Z 3,9x9,5 DIN 7982 (for dome light at roof, front)	2	

10/024

Fig. No.	No. of spare part	Denomination	Quantity	Remarks
53	000 821 02 52	Door contact	1	
-	-	Countersunk screw S 2, 9x9, 5 DIN 7982 (for door contact at front wall pillar)	2	
		CIGAR LIGHTER		
55	000 825 09 53	Cigar lighter 12 Volt	1	
56	11 120 825 04 51	Inserted part with glowing coil and button (12 Volt)	1	
58	000 825 02 52	Glowing coil 12 Volt (glow spiral)	1	
		HEADLIGHTS		
61	000 544 18 02	Headlight (make Bosch)) optional	2	) only complete exchangeable
-	000 544 05 02	Headlight (make Hella)) optional	2	) only complete exchangeable
62	000 544 09 89	Outer rim (make Bosch)	2	
-	000 544 38 89	Outer rim (cover ring) (make Hella)	2	
63	000 544 29 89	Ring, black lacquered (make Bosch)	2	
-	000 544 42 89	Ring (make Hella)	2	
64	000 544 10 90	Glass (make Bosch)	2	

Fig. No.	No. of spare part	Denomination	Quantity	Remarks
-	000 544 38 90	Glass (scattering pane) (make Hella)	2	
65	000 544 11 80	Sealing ring (make Bosch)	2	
-	000 544 28 80	Sealing ring (make Hella)	2	
66	000 544 03 91	Retaining spring (make Bosch)	16	) for retaining mirror
-	000 544 17 91	Retaining spring (snap ring) (make Hella)	16	)
67	000 544 16 91	Clamp (make Bosch)	2	) for lamp socket
-	000 544 14 91	Tension spring (make Hella)	2	)
68	000 544 05 93	Lamp socket (make Bosch)	2	
-	000 544 17 93	Lamp socket (make Hella)	2	
69	000 544 22 92	Reflector (mirror rubber-mounted) (make Bosch)	2	
-	000 544 16 92	Reflector (make Hella)	2	
70	000 544 00 74	Rubber mounting pin (in supporting ring for mirror) (make Bosch)	2	

Fig. No.	No. of spare part	Denomination	Quantity	Remarks
71	000 544 01 74	Rubber mounting pin with bore (for mirror adjustment)	4	)) make Bosch)
72	000 544 21 91	Retaining spring	4	)
-	-	Bulb B 12 V 35/35 W DIN 72601	2	))for headlights
-	-	Bulb G 12 V 5 W DIN 72601) optional	2	)make Bosch)and Hella
-	-	Bulb G 12 V 3 W DIN 72601)	2	)
73	120 987 00 37	Sleeve (for cable protective tube) (at wheel arch)	2	
74	120 540 00 58	Rotary switch (for headlight and fog lamp)	1	
75	120 545 01 37	Button with rosette, chromium-plated	1	
76	120 540 02 44	Toggle switch (for parking light)	1	
77	120 545 02 72	Rosette	1	
		LICENCE PLATE LIGHTING		
80	10 120 820 01 62	Licence plate lamp, left	1	
81	10 120 820 02 62	Licence plate lamp, right (with bilateral light outlet)	1	

Fig. No.	No. of spare part	Denomination	Quantity	Remarks
82	10 120 820 01 63	Housing, left, chromium-plated	1	
83	10 120 820 02 63	Housing, right, chromium-plated	1	
84	10 120 826 00 66	Lens (for licence plate and nationality sign lighting)	3	
85	10 186 826 00 69	Seal (between housing and lens)	3	
-	-	Lens-hd. countersunk screw AM 3x8 DIN 7988	6	))for lens at
-	-	Hex. nut AM 3 DIN 439	6	)housing)
86	10 120 820 00 66	Back plate with lamp bracket and washer (for luggage compartment lighting)	2	
87	10 186 826 00 68	Seal (for back plate)	2	
88	10 186 820 00 84	Screw plug (mounting for bulb)	2	
89	10 186 826 00 91	Sealing ring (under screw plug)	2	
-	-	Bulb L 12 V 5 W DIN 72601	2	
-	000 984 03 55	Washer	2	))for licence
-	-	Hex. nut M 5 DIN 934-5 S	4	)plate lighting)at rear lid
90	000 997 18 81	Grommet	2	)

Fig. No.	No. of spare part	Denomination	Quantity	Remarks
91	10 180 820 01 64	Stop and tail light, left with reverse drive light and parking light	1	
92	10 180 820 02 64	Stop and tail light, right with parking light	1	
93	10 180 820 01 22	Base plate with lamp holder and reflector, left	1	
94	10 180 820 02 22	Base plate with lamp holder and reflector, right	1	
95	000 997 22 81	Grommet (for passage of cable)	2	
96	10 180 826 02 97	Sealing (between housing and cover)	2	
97	10 180 820 00 71	Cover with pressed in lamp lenses	2	
98	10 180 826 00 71	Screw, chromium-plated (for cover at housing)	4	
-	000 544 13 94	Bulb (for blinker)	2	
-	-	Bulb L 12 V 5 W DIN 72601 (for tail light)	2	
-	-	Bulb F 12 V 15 W DIN 72601 (for stop light)	2	

Fig. No.	No. of spare part	Denomination	Quantity	Remarks
-	-	Bulb F 12 V 15 W DIN 72601 (for reverse drive lamp)	1	
-	-	Bulb H 12 V 2 W DIN 72601 (for parking light)	2	
99	000 987 02 41	Rubber plate	2	)
-	-	Washer A 6 DIN 9021	2	)for stop and
-	-	Lock washer B 6 DIN 127	2	)tail light at
-	-	Hex. nut M 6 DIN 934-5 S	2	)rear mudguard

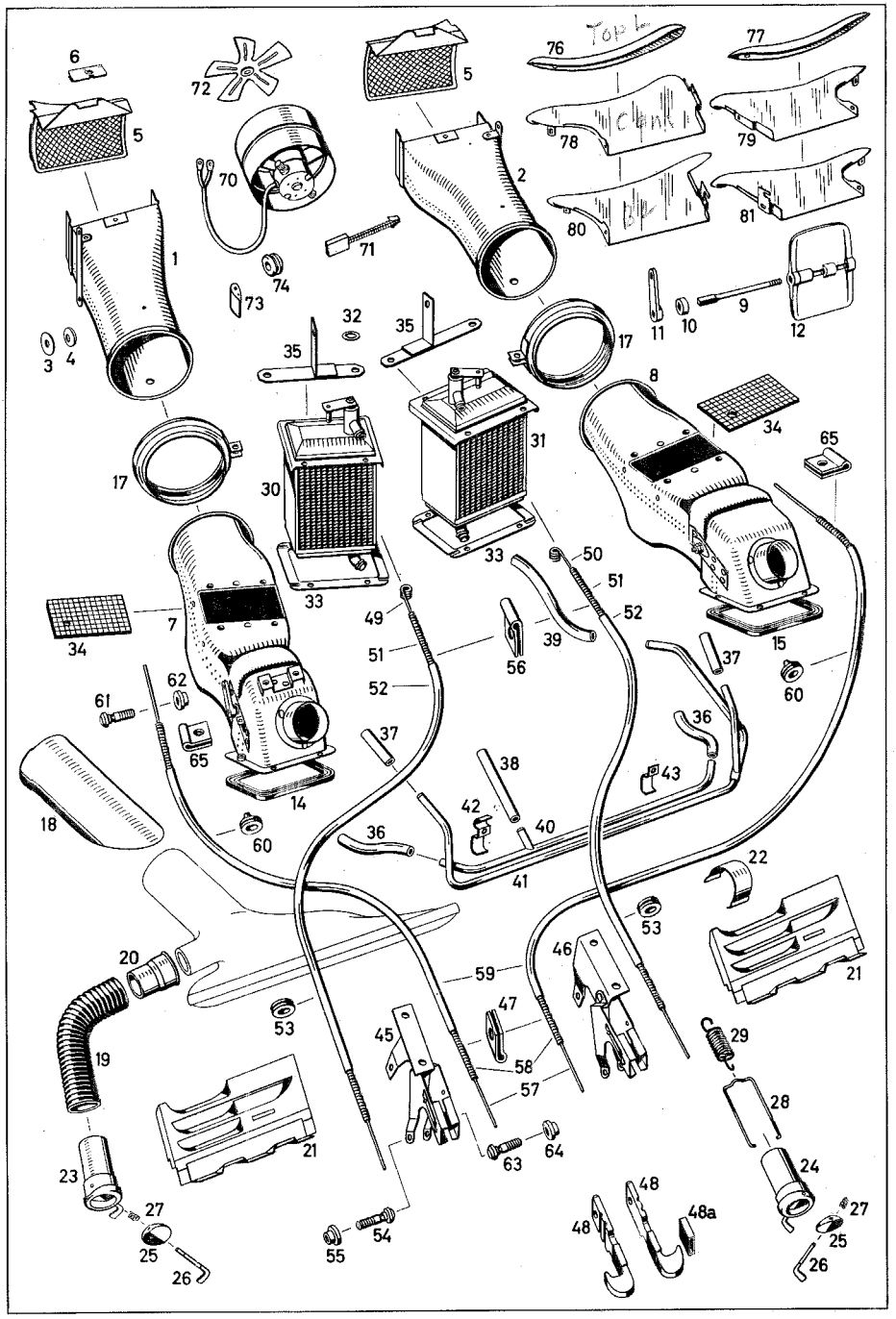
Top L
Chnl
Blr
1
2
3
4
5
6
7
8
9
10
11
12
14
15
17
18
19
20
21
22
23
24
25
26
27
28
29
30
31
32
33
34
35
36
37
38
39
40
41
42
43
45
46
47
48
48a
49
50
51
52
53
54
55
56
57
58
59
60
61
62
63
64
65
70
71
72
73
74
76
77
78
79
80
81

Fig. No.	No. of spare part	Denomination	Quantity	Remarks
		HEATING AND VENTILATION		
1	10 120 830 03 01	Scoop, left	1	
2	10 120 830 04 01	Scoop, right	1	
-	-	Hex.-hd. screw M 6x15 DIN 933-8 G	2	for scoop at wheel arch
-	-	Lock washer B 6 DIN 127	2	for scoop at wheel arch
3	000 987 02 41	Rubber plate	2	for scoop at wheel arch
4	120 545 01 76	Washer	2	for scoop at wheel arch
5	10 120 830 07 18	Insect screen, left and right	2	
-	-	Lens-hd. screw S 4,8x16 DIN 7981	2	for insect screen at scoop, front
-	-	Washer 5,3 DIN 125 without bevel	2	for insect screen at scoop, front
6	000 994 07 45	Nut	2	for insect screen at scoop, front
7	10 120 830 17 62	Air duct, left	1	
8	10 120 830 04 62	Air duct, right	1	
9	10 120 831 00 48	Shaft for flap	2	
10	10 120 831 00 82	Bearing bushing	2	
11	10 120 831 00 33	Lever	2	
12	10 120 831 00 43	Flap for air duct	2	
-	-	Washer 5,3 DIN 125 without bevel (for shaft at air duct)	2	

Fig. No.	No. of spare part	Denomination	Quantity	Remarks
-	-	Hex. nut AM 5 DIN 439 (for shaft at air duct)	4	
-	-	Threaded pin M 4x6 DIN 553 (for lever at shaft)	2	
14	10 120 831 06 99	Sealing rubber, left (between air duct and cowl)	1	
15	10 120 831 05 99	Sealing rubber, right (between air duct and cowl)	1	
-	-	Lens-hd. screw AM 6x15 DIN 7985	6	)
-	-	Washer 6,4 DIN 125 without bevel	8	) for air duct at cowl
-	-	Hex.-hd. screw M 6x60 DIN 931	2	)
17	10 120 830 01 29	Tension strap for air duct	2	
-	-	Lens-hd. screw AM 6x22 DIN 7985	2	)
-	-	Lock washer B 6 DIN 127	2	) for tension strap at air duct
-	-	Hex. nut M 6 DIN 934-5 S	2	)
18	10 120 831 02 88	Hose (from air duct to defroster nozzle)	2	
19	10 120 831 01 88	Hose 160 mm long (from defroster nozzle to annular nozzle)	2	
20	10 120 831 00 26	Transfer fitting (for hose, side pane ventilation)	2	

Fig. No.	No. of spare part	Denomination	Quantity	Remarks
21	10 120 830 05 42	Regulation flap, left and right (for cross duct) (for heating and ventilation at front wall, bottom, inner)	2	
22	10 120 831 00 34	Spring (for regulating flap)	2	
-	000 994 06 45	Nut	4	for regulating flap at cross duct
-	-	Lens-hd. screw S 4, 8x13 DIN 7981	4	
23	10 120 830 05 54	Annular nozzle, left	1	for air outlet, side pane ventilation
24	10 120 830 06 54	Annular nozzle, right	1	
25	10 120 831 00 24	Flap	2	
26	10 120 831 00 15	Pin with handle	2	
27	10 186 831 00 34	Pressure spring	2	
-	-	Locking plate 2, 3 DIN 6799	2	
28	10 120 831 00 32	Wire clamp	2	for annular nozzle at instrument. panel
29	120 993 16 10	Release spring	2	
30	10 120 835 05 01	Heat exchanger, left	1	
31	10 120 835 06 01	Heat exchanger, right	1	
32	000 835 00 98	Gasket (ring in regulating valve, left and right)	2	

Fig. No.	No. of spare part	Denomination	Quantity	Remarks
33	10 120 835 00 92	Sealing rubber	2	)
-	-	Lens-hd. screw AM 5x15 DIN 7985	6	) for heat exchanger and bracket at air duct
-	-	Lens-hd. screw AM 5x18 DIN 7985	2	)
-	-	Washer A 5 DIN 9021	2	)
34	000 983 21 92	Intermediate layer (at heat exchanger)	2	state length and width when ordering
35	10 120 830 00 50	Bracket (for Bowden cable)	2	
36	10 120 831 00 94	Hose 175 mm long (for forward flow) (from pipe line to heat exchanger, bottom)	2	
37	10 120 831 01 94	Hose 80 mm long (for return flow) (from pipe line to heat exchanger, top)	2	
38	10 120 831 00 97	Hose 360 mm long (for forward flow from engine)	1	
39	10 120 831 01 97	Hose 320 mm long (for return flow to engine)	1	
-	-	Hose strap 5x0,35 N 263 (state length when ordering)	a.r.	) for hoses at engine and forward and
-	-	Hose clamp WSN 5 N 262	12	) return flow line

Fig. No.	No. of spare part	Denomination	Quantity	Remarks
40	10 120 830 01 15	Forward flow line (at cowl, bottom)	1	
41	10 121 830 00 16	Return flow line (at cowl, top)	1	
42	10 120 830 00 68	Fixing clamp (for return flow line)	1	
43	10 120 830 01 68	Fixing clamp (for forward flow line)	1	
-	-	Lens-hd. screw AM 6 x 15 DIN 7985	2	for fixing clamps at cowl
-	-	Lock washer B 6 DIN 127	2	
45	10 120 830 11 33	Control, left	1	for heating and air control
46	10 120 830 12 33	Control, right	1	
47	136 995 06 01	Fixing clamp	4	
-	-	Hex. -hd. screw M 4x15 DIN 933-8 G	2	for fixing clamp at fixing angle
-	-	Lock washer B 4 DIN 127	2	
-	-	Hex. nut M 4 DIN 934-5 S	2	
-	-	Hex. -hd. screw M 4x12 DIN 933-8 G	4	for fixing angle at instrument panel
-	-	Lock washer B 4 DIN 127	4	
-	000 990 25 91	Square cage nut	4	

10/024

Fig. No.	No. of spare part	Denomination	Quantity	Remarks
48	10 180 830 00 36	Handle (for heating and ventilation)	4	
48a	10 180 833 00 91	Grommet	4	
49	10 120 833 03 31	Wire cable, left	1	for control cock
50	10 120 833 04 31	Wire cable, right	1	
51	000 988 01 72	Wire spiral 565 mm long (for wire cable to control cock)	2	state length when ordering
52	-	Insulating hose B 5x6, 2 DIN 40621 sw 520 mm long	2	
53	000 997 18 81	Grommet (for wire cable, control cock through dashboard)	2	
-	-	Locking plate 4 DIN 6799 (for wire cable at control cock)	2	
54	12 136 831 00 89	Fixing screw	2	for wire cable at fixing angle
55	136 072 00 50	Bushing	2	
-	-	Washer 4, 3 DIN 433	2	
-	-	Lock washer B 4 DIN 127	2	
-	-	Hex. nut M 4 DIN 934-5 S	2	
56	136 995 06 01	Fixing clamp	2	for wire cable at heat exchanger
-	-	Lens-hd. screw AM 4x10 DIN 7985	2	

Fig. No.	No. of spare part	Denomination	Quantity	Remarks
-	-	Lock washer B 4 DIN 127	2	)for wire cable
-	-	Hex. nut M 4 DIN 934-5 S	2	)at heat exchanger
57	10 120 833 01 31	Wire)	2	
58	000 988 01 72	Wire spiral) for heating flap 395 mm long)	2	)
59	-	Insulating hose B 5x6, 2 DIN 40621 sw 350 mm long	2	)state length)when ordering
60	186 997 06 81	Grommet (for Bowden cable through front wall)	2	
61	12 136 831 00 89	Fixing screw	2	)
62	12 136 831 00 90	Bushing	2	)
-	-	Washer 4, 3 DIN 433	2	)for wire cable
-	-	Lock washer B 4 DIN 127	2	)at flap
-	-	Hex. nut M 4 DIN 934-5 S	2	)
63	12 136 831 00 89	Fixing screw	2	
64	136 072 00 50	Bushing	2	)
-	-	Washer 4, 3 DIN 433	2	)for wire cable
-	-	Lock washer B 4 DIN 127	2	)at control lever
-	-	Hex. nut M 4 DIN 934-5 S	2	)
65	136 995 06 01	Fixing clamp	2	for wire cable at air duct

Fig. No.	No. of spare part	Denomination	Quantity	Remarks
-	-	Lens-hd. screw AM 4x10 DIN 7985	2	)))for wire cable
-	-	Lock washer B 4 DIN 127	2	) at air duct)
-	-	Hex. nut M 4 DIN 934-5 S	2	)
70	11 120 830 02 08	Blower 12 Volt	1	
71	000 835 01 75	Carbon brush	a.r.	
72	10 120 835 01 85	Fan blade	1	
73	10 120 835 01 28	Rubber mounting (for mounting of blower)	3	
-	-	Lens-hd. screw AM 5x12 DIN 7985	3	)))for blower
-	-	Washer 5, 3 DIN 433	3	)in scoop)
-	-	Lock washer B 5 DIN 127	3	)
74	120 997 03 81	Grommet	1	
		ORNAMENTAL MOULDINGS		
76	10 121 838 07 36	Ornamental moulding (for air inlet, top, left)	1	
77	10 121 838 08 36	Ornamental moulding (for air inlet, top, right)	1	
-	-	Lens-hd. screw S 2, 9x6, 5 DIN 7981 chromium-plated (for ornamental moulding at engine hood)	4	

Fig. No.	No. of spare part	Denomination	Quantity	Remarks
78	10 121 838 09 36	Ornamental moulding (for air inlet, center, left)	1	front, beside radiator grill
79	10 121 838 10 36	Ornamental moulding (for air inlet, center, right)	1	
-	-	Lens-hd. screw AM 4x10 DIN 7985 chrom.-plated	2	for ornamental moulding, center, at covering panel, outer
-	-	Washer 4,3 DIN 125 without bevel	4	
-	-	Lock washer B 4 DIN 127	2	
-	-	Hex. nut M 4 DIN 934-5 S	2	
-	-	Lens-hd. screw AM 4x18 DIN 7985 chrom.-plated	2	for ornamental moulding, center, at covering panel, center
-	-	Washer 4,3 DIN 125 without bevel	2	
-	-	Lock washer B 4 DIN 127	2	
-	-	Hex. nut M 4 DIN 934-5 S	2	
-	-	Lens-hd. screw AM 4x12 DIN 7985 chrom.-plated	2	for ornamental moulding, center at wheel arch
-	-	Washer 4,3 DIN 125 without bevel	4	
-	-	Lock washer B 4 DIN 127	2	
80	10 121 838 11 36	Ornamental moulding (for air inlet, bottom, left)	1	front, beside radiator grill
81	10 121 838 12 36	Ornamental moulding (for air inlet, bottom, right)	1	

10/024

Fig. No.	No. of spare part	Denomination	Quantity	Remarks
-	-	Lens-hd. screw AM 4x10 DIN 7985 chrom.-plated	2	for ornamental moulding, bottom, at cover panel, outer
-	-	Washer 4,3 DIN 125 without bevel	4	
-	-	Lock washer B 4 DIN 127	2	
-	-	Hex. nut M 4 DIN 934-5 S	2	
-	-	Lens-hd. screw AM 4x12 DIN 7985 chrom.-plated	2	for ornamental moulding, bottom, at cover panel, center
-	-	Washer 4,3 DIN 125 without bevel	2	
-	-	Lock washer B 4 DIN 127	2	
-	-	Hex. nut M 4 DIN 934-5 S	2	
-	-	Lens-hd. screw AM 4x12 DIN 7985 chrom.-plated	4	for ornamental moulding, bottom, at reinforcement bracket
-	-	Washer 4,3 DIN 125 without bevel	4	
-	-	Lock washer B 4 DIN 127	4	

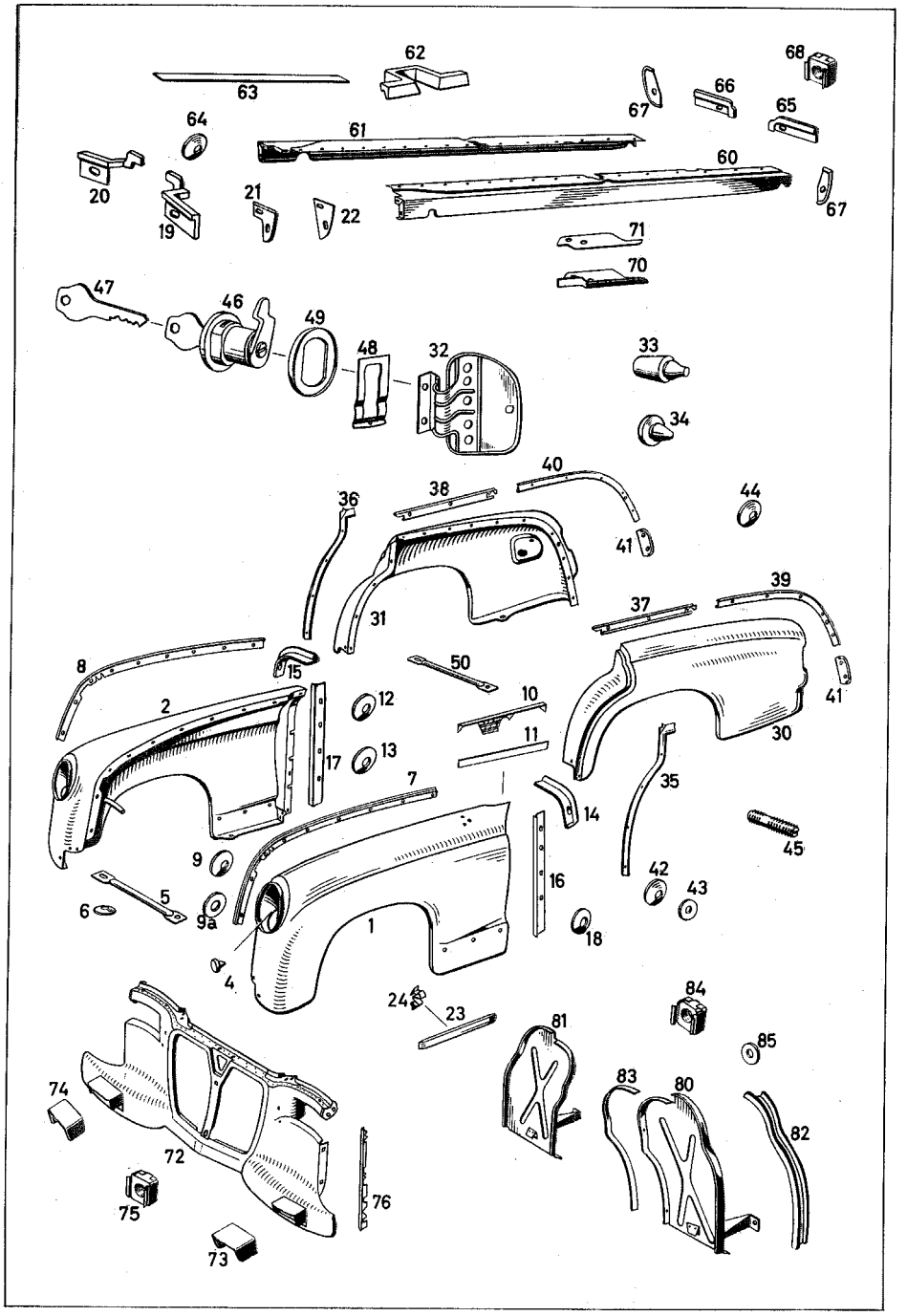
62
63
68
67
66
65
64
61
60
20
19
21
22
67
71
70
47
46
49
48
32
33
34
40
36
38
44
41
31
39
37
8
15
50
12
10
41
2
11
30
17
13
35
7
14
45
9
16
42
43
5
6
9a
1
18
4
24
23
84
81
85
74
83
80
72
82
75
76
73

Fig. No.	No. of spare part	Denomination	Quantity	Remarks
		FRONT MUDGUARD		
1	10 120 880 03 18	Front mudguard, left	1	
2	10 120 880 04 18	Front mudguard, right	1	
4	000 987 18 40	Rubber buffer (for headlight housing)	4	
5	10 120 882 00 18	Strut	2	
-	-	Hex. -hd. screw M 6x15 DIN 933-8 G	4	) for strut at front mudguard and side member
6	000 990 01 48	Lock washer	6	
-	-	Hex. nut M 6 DIN 934-5 S	4	
7	10 120 881 05 94	Seal, left	1	) for front mudguard at wheel arch
8	10 120 881 06 94	Seal, right	1	
-	-	Hex. -hd. screw M 6x15 DIN 933-8 G	14	
9	000 990 08 48	Lock washer	12	
9a	000 984 03 55	Washer	2	
10	10 120 881 04 94	Seal (state colour when ordering)	2	) for front mudguard at front wall
11	000 989 46 85	Terostat Type IV 6 mm (state length when ordering)	a.r.	
12	000 990 08 48	Lock washer	6	
13	000 990 01 48	Lock washer	6	

Fig. No.	No. of spare part	Denomination	Quantity	Remarks
-	-	Hex. nut M 6 DIN 934-5 S	6	)
14	10 120 883 07 91	Gasket, left	1	)for front mud-
15	10 120 883 08 91	Gasket, right	1	)guard at front)wall
-	-	Hex.-hd. screw M 6x15 DIN 933-8 G	6	)
16	10 120 881 13 94	Seal, left	1	)
17	10 120 881 14 94	Seal, right	1	)
-	-	Hex.-hd. screw M 6x15 DIN 933-8 G	4	)
18	000 990 01 48	Lock washer	8	)for front mud-)guard at en-)trance sill
-	-	Hex. nut M 6 DIN 934-5 S	4	)
19	10 120 883 09 91	Gasket, left	1	)
20	10 120 883 10 91	Gasket, right	1	)
21	10 120 883 02 91	Gasket	2	)
22	10 120 881 00 13	Shim	a.r.	)
23	10 120 880 00 94	Ornamental moulding (for front mudguard)	2	
24	000 988 59 78	Clip (for ornamental moulding at front mudguard)	6	

Fig. No.	No. of spare part	Denomination	Quantity	Remarks
		REAR MUDGUARD		
30	10 120 880 05 22	Rear mudguard, left	1	
31	10 120 880 08 22	Rear mudguard, right with flap	1	
32	10 120 880 00 25	Flap with hinge (at rear mudguard, right)	1	
-	-	Lock washer B 6 DIN 127	2	)
-	-	Washer 8,4 DIN 125 without bevel	2	) for flap at rear mudguard
-	-	Hex. nut M 6 DIN 934-5 S	2	)
33	000 987 35 40	Rubber buffer	2	
34	000 987 18 40	Rubber buffer (for recess)	1	
35	10 120 882 05 94	Seal, left	1	)
36	10 120 882 06 94	Seal, right	1	) for rear mud-
37	10 120 882 09 94	Seal, left (from rear mudguard up to rear lid)) state colour when ordering	1	) guard at body resp. wheel arch
38	10 120 882 10 94	Seal, right (from rear mudguard up to rear lid)) state colour when ordering	1	)
39	10 120 882 07 94	Seal (for rear mudguard from rear groove up to center part, left, bottom)	1	

Fig. No.	No. of spare part	Denomination	Quantity	Remarks
40	10 120 882 08 94	Seal (for rear mudguard from rear groove up to center part, right, bottom)	1	
41	10 120 882 03 94	Seal (between rear mudguard and center part, bottom)	2	
42	000 990 08 48	Lock washer	24	))
43	000 987 15 41	Rubber plate	18	))
44	000 990 01 48	Lock washer	10	))for rear mud-
-	-	Hex. nut M 6 DIN 934-5 S	12	)guard at body)resp. wheel
45	000 990 12 05	Stud bolt	2	)arch)
-	-	Washer 6, 4 DIN 125	6	))
-	-	Hex. -hd. screw M 6x20 DIN 933-8 G	28	))
46	10 120 880 00 98	Lock (for flap at rear mudguard)	1	lock same as with door handle
47	000 766 03 06	Key	1	
48	000 994 01 21	Locking plate	1	))for lock at flap
49	000 987 19 41	Rubber plate	1	)
50	10 120 882 00 18	Strut (for rear mudguard)	2	
-	-	Hex. -hd. screw M 6x15 DIN 933-8 G (for strut at mudguard)	2	

10/024

Fig. No.	No. of spare part	Denomination	Quantity	Remarks
-	000 990 01 48	Lock washer	4	for strut at mudguard
-	-	Hex. nut M 6 DIN 934-5 S	2	for strut at mudguard
-	-	Hex.-hd. screw M 6x15 DIN 933-8 G	2	for strut at frame
-	000 990 01 48	Lock washer	2	for strut at frame
-	-	Hex. nut M 6 DIN 934-5 S	2	for strut at frame
60	10 120 880 01 31	Entrance sill, left	1	
61	10 120 880 02 31	Entrance sill, right	1	
62	10 120 883 00 92	Gasket (at center pillar under entrance sill)	2	
-	-	Lens-hd. screw S 3, 5x9, 5 DIN 7981	30	for entrance sill at body
63	000 989 47 85	Terostat 40 x 2 (between side member and entrance sill) (state length when ordering)	a.r.	
-	-	Hex.-hd. screw M 6x20 DIN 933-8 G	4	for entrance sill at bracket
64	000 990 08 48	Lock washer	8	for entrance sill at bracket
-	-	Hex. nut M 6 DIN 934-5 S	4	for entrance sill at bracket
-	-	Hex.-hd. screw M 6x15 DIN 933-8 G	2	for entrance sill at front wall pillar
-	000 990 08 48	Lock washer	2	for entrance sill at front wall pillar

Fig. No.	No. of spare part	Denomination	Quantity	Remarks
65	10 120 883 07 91	Gasket, left	1	)
66	10 120 883 08 91	Gasket, right	1	)
67	10 120 883 06 91	Gasket	2	)
-	-	Hex. -hd. screw M 6x15 DIN 933-8 G	4	) for entrance sill at rear
-	000 990 08 48	Lock washer	6	) mudguard
-	-	Hex. nut M 6 DIN 934-5 S	2	)
68	000 990 22 91	Square cage nut M 6	2	)
70	10 120 883 01 93	Door seal, left	1	) on entrance sill between driver's
-	10 120 883 02 93	Door seal, right	1	) door and rear door
71	10 120 883 01 18	Fixing plate, left	1	) for sealing door
-	10 120 883 02 18	Fixing plate, right	1	)
-	-	Countersunk screw Z 3, 5x9, 5 DIN 7982 (for fixing plate at entrance sill)	4	
72	10 121 880 01 40	Cover panel, front (between front mudguard, left and right and engine hood below radiator shell)	1	
73	10 121 884 01 22	Covering (for bracket bumper, front, left)	1	
74	10 121 884 02 22	Covering (for bracket bumper, front, right)	1	

Fig. No.	No. of spare part	Denomination	Quantity	Remarks
75	000 990 22 91	Square cage nut M 6	5	
76	10 120 884 00 94	Seal (state colour when ordering)	2	
-	-	Hex. -hd. screw M 6x15 DIN 933-8 G	12	for front mudguard, cover panel
-	000 990 01 48	Lock washer	20	
-	-	Hex. nut M 6 DIN 934-5 S	6	
-	-	Hex. -hd. screw M 6x15 DIN 933-8 G	2	
-	000 990 01 48	Lock washer	4	
-	-	Hex. nut M 6 DIN 934-5 S	2	for cover panel at frame
-	-	Hex. -hd. screw M 8x22 DIN 933-8 G	1	
-	-	Washer A 8 DIN 9021	1	
-	-	Lock washer B 8 DIN 127	1	
-	-	Washer 8, 4 DIN 125 without bevel	a.r.	
80	10 120 880 03 43	Partition, left	1	under front mudguard
81	10 120 880 04 43	Partition, right	1	
82	10 120 884 00 98	Seal 560 mm long (at partition, outer)	2	Profile No. 000 987 16 51
83	000 989 45 85	Terostat Type X 430 mm long (for partition at wheel housing and reinforcement plate)	2	state length when ordering

Fig. No.	No. of spare part	Denomination	Quantity	Remarks
-	-	Hex.-hd. screw M 6x15 DIN 933-8 G	8	) for partition at wheel house and reinforcement
-	-	Washer 6,4 DIN 125 without bevel	4	)
-	-	Lock washer B 6 DIN 127	6	)
84	000 990 22 91	Square cage nut	6	)
85	000 987 15 41	Rubber plate	2	)
-	-	Washer A 6 DIN 9021	2	)

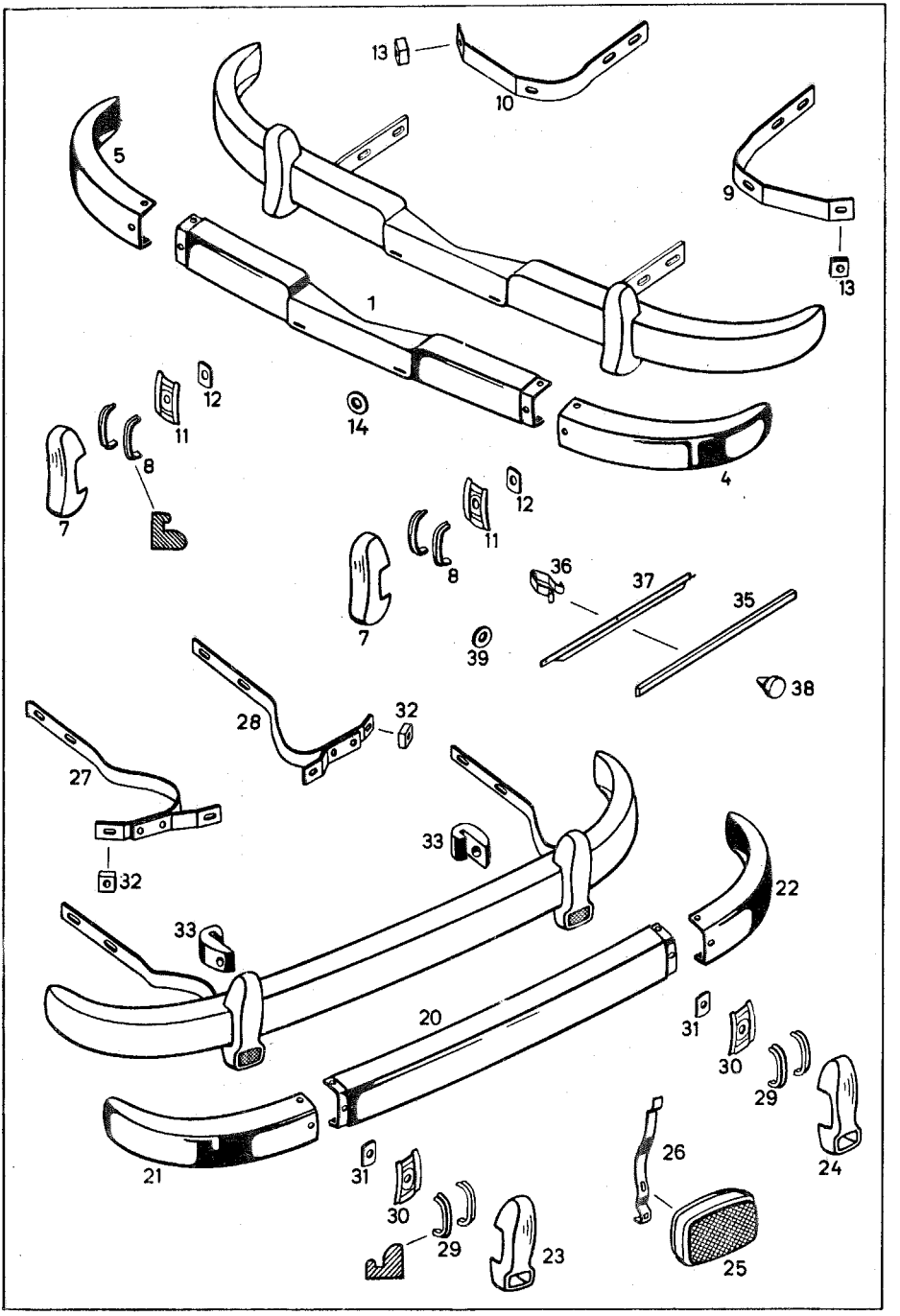
13
10
5
9
13
1
12
11
14
8
7
4
12
11
8
7
36
37
35
39
38
28
32
27
32
33
33
22
20
31
30
29
24
21
31
30
29
23
26
25

Fig. No.	No. of spare part	Denomination	Quantity	Remarks
		BUMPER, FRONT		
1	10 121 885 00 01	Center part (for bumper, front)	1	
4	10 120 880 00 72	Side part, left	1	for bumper, front
5	10 120 880 01 72	Side part, right	1	
-	-	Button-hd. screw AM 8x15 DIN 7986 chrom.-plated	4	for bumper, side part at center part, left and right, front
-	-	Washer 8,4 DIN 125	4	
-	-	Lock washer B 8 DIN 127	4	
-	-	Hex. nut M 8 DIN 934-5 S	4	
7	10 120 880 00 55	Guard, left and right (for bumper, front)	2	
8	000 987 47 35	Rubber profile, 170 mm long (between guard and bumper)	4	state length when ordering
9	10 120 885 01 40	Bracket, left	1	for bumper, front
10	10 120 885 02 40	Bracket, right	1	
11	10 120 885 00 43	Mounting plate	2	for guard and bracket at bumper, inner
-	-	Hex.-hd. screw M 10x35 DIN 933-8 G	2	
-	-	Washer 10,5 DIN 125	2	
-	-	Lock washer B 10 DIN 127	2	
12	000 984 23 56	Washer	2	
-	-	Hex.-hd. screw M 10x22 DIN 933-8 G	2	for bumper at bracket, outside, front
-	-	Washer 10,5 DIN 125	2	
-	-	Lock washer B 10 DIN 127	2	
13	000 990 04 52	Square nut	2	

Fig. No.	No. of spare part	Denomination	Quantity	Remarks
-	-	Hex.-hd. screw M 10x25 DIN 933-8 G	4	for bumper bracket at
-	-	Washer 10, 5 DIN 125	4	frame, front
-	-	Lock washer B 10 DIN 127	4	
-	-	Lens-hd. screw AM 5x15 DIN 85	2	
-	-	Washer A 5 DIN 9021	2	
-	-	Hex. nut M 5 DIN 934-5 S	2	
14	000 987 24 41	Rubber plate	2	
		BUMPER, REAR		
20	10 120 885 05 02	Center piece (for bumper, rear)	1	
21	10 120 880 01 72	Side part, left	1	for bumper, rear
22	10 120 880 00 72	Side part, right	1	
-	-	Button-hd. screw AM 8x15 DIN 7986 chrom.-plated	4	for bumper, side part at center part, left and right, rear
-	-	Washer 8, 4 DIN 125	4	
-	-	Lock washer B 8 DIN 127	4	
-	-	Hex. nut M 8 DIN 934-5 S	4	
23	10 120 880 07 55	Guard, left	1	for bumper, rear
24	10 120 880 08 55	Guard, right	1	

Fig. No.	No. of spare part	Denomination	Quantity	Remarks
25	10 120 826 01 40	Reflector	2	
26	10 120 826 03 35	Spring (for reflector at guard)	2	
27	10 120 880 01 48	Bracket, left	1	for bumper, rear
28	10 120 880 02 48	Bracket, right	1	
29	000 987 47 35	Rubber profile, 170 mm long (for guard and bumper at bracket, rear)	4	state length when ordering
30	10 120 885 00 43	Mounting plate	2	
-	-	Hex.-hd. screw M 10x35 DIN 933-8 G	2	for guard and bumper at bracket, rear
-	-	Washer 10, 5 DIN 125	2	
-	-	Lock washer B 10 DIN 127	2	
31	000 984 23 56	Washer	2	
-	-	Hex.-hd. screw M 10x22 DIN 933-8 G	2	for bumper at bracket, outside, rear
-	-	Washer 10, 5 DIN 125	2	
-	-	Lock washer B 10 DIN 127	2	
32	000 990 04 52	Square nut	2	
-	-	Hex.-hd. screw M 10x25 DIN 933-8 G	4	for bumper with bracket at frame, rear
-	-	Washer 10, 5 DIN 125	4	

Fig. No.	No. of spare part	Denomination	Quantity	Remarks
-	-	Lock washer B 10 DIN 127 (for bumper with bracket at frame, rear)	4	
33	10 120 885 01 96	Rubber buffer (between bumper bracket and body)	2	
35	10 120 885 02 82	Ornamental moulding (over licence plate)	1	
36	000 988 47 78	Clamp	3	)
-	000 989 46 85	Terostat cord 6 dia. Type X (state length when ordering)	a.r.	)for ornamental moulding at rear lid
37	10 120 885 00 97	Underlayer 419 mm long (for ornamental moulding)	1	)
38	000 987 30 40	Buffer button	1	)
-	-	Lens-hd. screw AM 5x15 DIN 85	4	)for licence plate at
-	-	Washer A 5 DIN 9021	4	)rear lid
39	000 987 24 41	Rubber plate	4	)
-	-	Hex. nut M 5 DIN 934-5 S	4	)

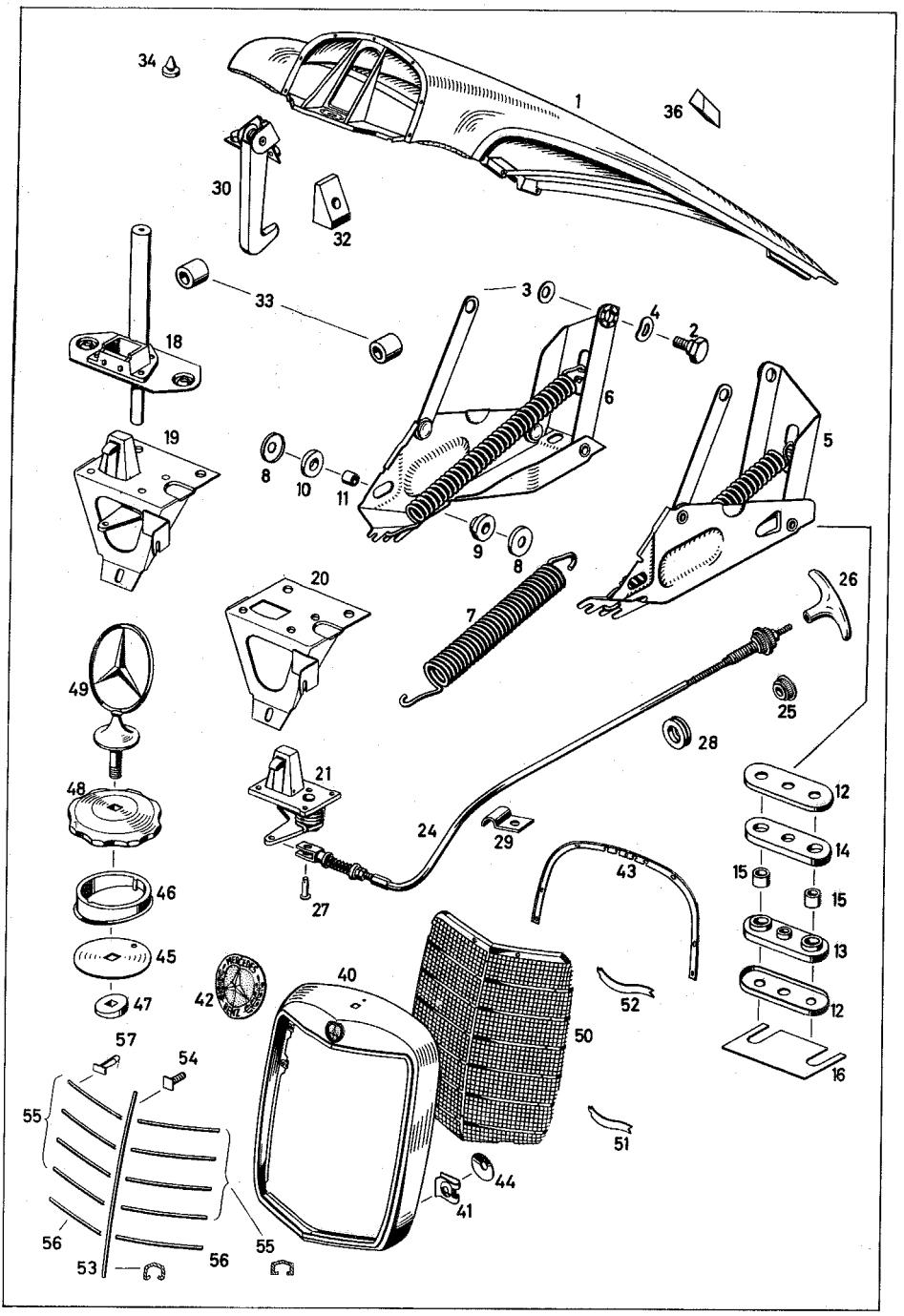
34
1
36
30
32
33
3
4
2
18
6
5
19
8
10
11
9
8
20
7
26
49
25
28
48
21
12
24
29
14
43
15
46
15
27
13
45
42
40
52
12
47
50
16
57
54
51
55
44
41
56
53
56
55

Fig. No.	No. of spare part	Denomination	Quantity	Remarks
		ENGINE HOOD		
1	10 121 880 00 57	Engine hood	1	
2	000 984 03 33	Hex. -hd. screw	4	) for hood hinge at engine hood
3	000 990 04 48	Lock washer	4	)
4	000 990 00 48	Lock washer	4	)
5	10 120 880 05 29	Hood hinge, left) with 3 stops for spring	1	
6	10 120 880 06 29	Hood hinge, right)	1	
7	10 120 887 02 79	Tension spring	2	
8	10 120 887 04 58	Washer	4	) for hood hinge at wheel arch
9	10 120 887 00 78	Rubber mounting	2	)
10	10 120 887 00 94	Rubber ring	2	)
11	10 120 887 00 49	Bushing	2	)
-	-	Hex. -hd. screw M 8x25 DIN 933-8 G	2	)
-	120 990 04 05	Stud bolt	4	) for hood hinge at supporting bracket
12	10 120 887 05 58	Washer	4	)
13	10 120 887 02 78	Rubber mounting	2	)
14	10 120 887 01 94	Rubber intermediate layer	2	)
15	10 120 887 01 49	Bushing (between rubber mounting and screw)	4	)

Fig. No.	No. of spare part	Denomination	Quantity	Remarks
16	10 120 887 00 56	Shim)) optional	a.r.	)) for hood hinge
-	10 120 887 01 56	Shim)	a.r.	) at supporting
-	-	Hex. nut M 6 DIN 934-5 S	4	) bracket
18	10 120 880 05 60	Engine hood lock, upper part	1	
-	-	Countersunk screw AM 6x12 DIN 7987	2	)) for engine hood
-	000 990 01 48	Lock washer	2	) lock, upper
-	-	Hex. nut M 6 DIN 934-5 S	2	) part at hood) clamp
19	10 120 880 03 60	Lock, lower part	1	
20	10 120 880 00 75	Bracket (for hood lock)	1	
21	10 120 880 02 60	Engine hood lock, lower part	1	
-	-	Button-hd. rivet 4x10 DIN 660 (for lock, lower part at bracket)	4	
-	-	Lens-hd. countersunk screw AM 6x12 DIN 7988	2	))
-	-	Lens-hd. screw AM 6x12 DIN 7985	1	)for bracket)with lock,)lower part at)cover panel
-	000 990 01 48	Washer	3	))
-	-	Hex. nut M 6 DIN 934-5 S	3	)

10/024

Fig. No.	No. of spare part	Denomination	Quantity	Remarks
24	10 120 880 04 59	Engine hood cable without handle	1	
25	187 527 00 72	Knurled nut	1	
26	120 302 08 01	Handle (for hood cable)	1	
27	-	Pin 5 h11x14x11,4 DIN 1434	1	)
-	-	Washer 5, 3 DIN 125	1	) for engine hood at engine hood lock, lower part
-	-	Cotter pin 1, 5x12 DIN 94	1	)
-	-	Lock washer 5 N 55 a	1	)
28	186 997 06 81	Grommet (for engine hood cable through dashboard and cross duct)	1	
29	186 995 02 20	Fixing clamp	1	)
-	-	Lens-hd. screw AM 4x10 DIN 7985	1	) for engine hood cable at front cover panel
-	-	Lock washer B 4 DIN 127	1	)
-	-	Hex. nut M 4 DIN 934-5 S	1	)
-	186 995 02 20	Fixing clamp	1	)
-	-	Lens-hd. countersunk screw S 4, 8 x 13 DIN 7981	1	) for engine hood cable at wheel arch
30	10 120 880 01 64	Locking hook, left	1	
-	-	Lock washer B 5 DIN 127 (for locking hook at engine hood, upper part)	2	

Fig. No.	No. of spare part	Denomination	Quantity	Remarks
-	-	Lens-hd. screw AM 5x12 DIN 7985 (for locking hook at engine hood, upper part)	2	
32	000 987 57 40	Rubber buffer (for engine hood seat)	4	
-	-	Lens-hd. screw Z 3, 9x16 DIN 7981	4	))for rubber buffer)at wheel arch
-	-	Washer 4, 3 DIN 433 without bevel	4	)
33	000 987 63 40	Rubber buffer (for engine hood seat)	2	
34	000 987 18 40	Rubber buffer (at cover panel, side)	4	
36	10 180 887 03 93	Seal (at engine hood)	2	
40	10 180 880 03 83	Radiator grill (without protective screen with firm plate, however, without star)	1	
41	000 994 05 45	Spring nut	9	
42	10 180 880 00 88	Commercial sign at radiator grill	1	
-	-	Lock washer B 4 DIN 127	1	)
-	-	Hex. nut M 4 DIN 934-5 S	1	)for commercial)sign at radiator
-	-	Washer 4, 3 DIN 125	1	)shell)

10/024

Fig. No.	No. of spare part	Denomination	Quantity	Remarks
43	10 121 888 00 98	Rubber intermediate layer (for radiator shell and engine hood)	1	
-	-	Lens-hd. screw S 4, 8x16 DIN 7981	9	)for radiator)shell at support-)ing frame of
44	000 990 03 48	Washer	9	)engine hood
45	10 180 888 00 97	Rubber underlayer	1	
46	10 180 888 00 13	Base, chromium-plated (for Mercedes star)	1	
47	10 180 888 00 12	Washer	1	
48	10 180 888 01 17	Rosette, chromium-plated (for Mercedes star)	1	
-	-	Lock washer B 10 DIN 137	1	)for rosette and) Mercedes star
-	-	Hex. nut M 10x1, 5 DIN 936-5 S	1	)at radiator shell
49	10 180 888 00 09	Mercedes star	1	
50	10 180 880 00 85	Radiator grill	1	
-	-	Lens-hd. screw AM 4x10 DIN 7985	4	)) for radiator)grill at radiator
-	-	Lock washer B 4 DIN 127	4	)ornamental)frame
-	-	Hex. nut M 4 DIN 934-5 S	4	))
-	-	Washer 4, 3 DIN 125	8	)

Fig. No.	No. of spare part	Denomination	Quantity	Remarks
51	10 120 888 00 34	Retaining spring, bottom	2	)for radiator
52	10 120 888 02 34	Retaining spring, top and center	6	)grill at radiator)ornamental frame
53	10 180 888 02 21	Ornamental moulding (along radiator grill)	1	
54	000 990 05 33	Square-hd. screw	4	))
-	-	Washer 3,2 DIN 125	4	)for ornamental
-	-	Lock washer B 3 DIN 127	4	)moulding at)radiator grill)
-	-	Hex. nut M 3 DIN 934-5 S	4	)
55	10 180 888 10 22	Ornamental moulding for radiator grill (1st, 2nd, 3rd, 4th from top)	8	
56	10 180 888 11 22	Ornamental moulding for radiator grill (5th from top)	2	
57	000 988 50 78	Clamp (for ornamental moulding at radiator grill)	20	

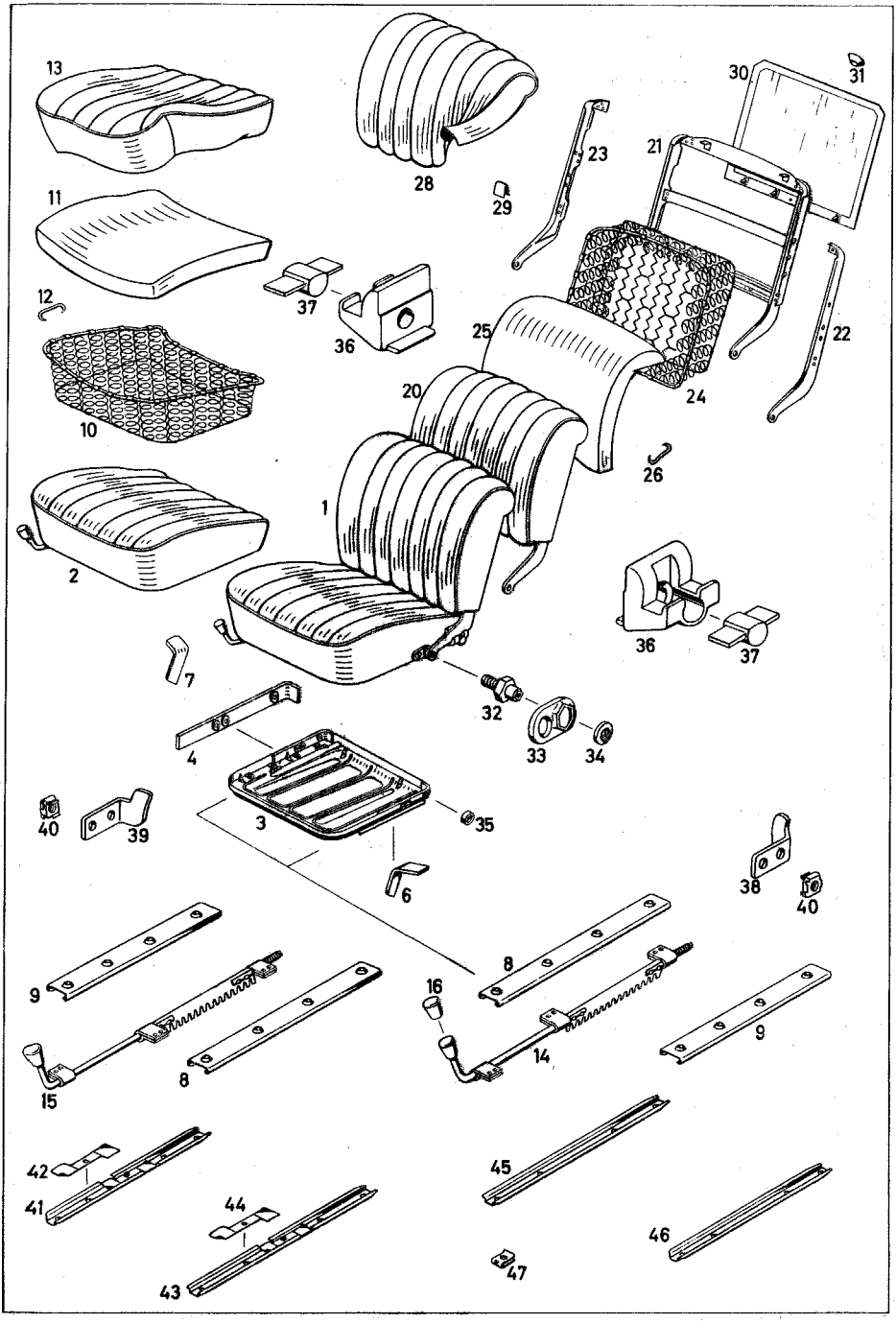
13
28
29
30
31
11
23
21
37
36
12
25
22
10
20
24
26
1
2
36
37
7
32
4
33
34
40
39
3
35
6
38
40
9
8
16
14
9
15
8
42
41
45
44
43
46
47

Fig. No.	No. of spare part	Denomination	Quantity	Remarks
		DRIVER'S SEAT		
1	10 120 910 39 01	Driver's seat, left	1	ready for installation with guide rails and shift lock; driver's seats, left and right are installed upon special request instead of driver's seat bench
-	10 120 910 40 01	Driver's seat, right	1	state colour of interior lining and body No. when ordering
2	10 120 910 16 30	Seat cushion, left	1	with shift lock
-	10 120 910 17 30	Seat cushion, right	1	with shift lock
3	10 120 910 09 22	Seat cushion frame, left	1	without shift lock
-	10 120 910 10 22	Seat cushion frame, right	1	without shift lock
4	10 186 910 03 29	Reinforcement angle	4	
6	10 187 912 01 12	Stop angle, left	1	
7	10 187 912 02 12	Stop angle, right	1	
8	10 136 919 01 36	Guide rail, inner	2	
9	10 136 919 02 36	Guide rail, outer	2	
-	-	Lens-hd. rivet 6 x 10 DIN 662 (for guide rail at seat cushion frame)	4	
10	10 120 910 05 40	Spring core, left	1	
-	10 120 910 06 40	Spring core, right	1	

Fig. No.	No. of spare part	Denomination	Quantity	Remarks
11	10 120 914 01 14	Rubber fiber layer, left	1	for driver's seat cushion
-	10 120 914 02 14	Rubber fiber layer, right	1	
12	000 984 20 61	Clamp 1.4 dia. (for layer at spring core)	18	
13	10 120 910 07 46	Cover (sewn) (for left driver's seat cushion)	1	state colour and body No. when ordering
-	10 120 910 08 46	Cover (sewn) (for right driver's seat cushion)	1	
14	10 120 910 17 05	Adjuster (for driver's seat, left)	1	
15	10 120 910 18 05	Adjuster (for driver's seat, right)	1	
16	12 136 919 00 60	Handle (for adjuster)	2	
-	-	Countersunk screw S 4, 8x16 DIN 7982	12	for adjuster at seat cushion frame
-	000 994 15 45	Nut	6	
20	10 120 910 17 32	Back rest (for driver's seat, left and right)	2	state colour and body No. when ordering
21	10 120 910 02 34	Back rest frame (for driver's seat, left and right)	2	
22	10 120 910 01 56	Back rest rail, left	2	for left and right driver's seat
23	10 120 910 02 56	Back rest rail, right	2	

Fig. No.	No. of spare part	Denomination	Quantity	Remarks
24	10 120 910 06 41	Spring core	2	
25	10 120 914 02 16	Rubber fiber layer (for driver's seat back rest)	2	
26	000 984 20 61	Clamp (for layer at spring core)	20	
28	10 120 910 06 47	Cover (sewn) (for back rest, left and right)	2	state colour and body No. when ordering
29	136 988 02 78	Clamp (for cover at back rest frame)	22	
30	10 120 910 02 39	Lining (for driver's seat back rest)	2	state colour and body No. when ordering
-	-	Lens-hd. countersunk screw S 3, 9x13 DIN 7983 chromium-plated	4	for lining at reinforcement rail
31	000 985 06 62	Countersunk washer chromium-plated	4	
32	10 120 919 00 15	Swivel pin	4	
33	10 120 919 00 23	Rosette, chromium-plated	4	
-	-	Lock washer B 10 DIN 137	4	for back rest at seat cushion
-	-	Lens-hd. countersunk screw AM 10x20 DIN 91, chrom.-plated	4	
34	10 120 919 00 13	Washer, chromium-plated	4	
-	-	Toothed washer V 6,5 DIN 6797	4	

10/024

Fig. No.	No. of spare part	Denomination	Quantity	Remarks
-	-	Lens-hd. countersunk screw AM 6x12 DIN 91, chrom.-plated	4	for back rest at seat cushion
35	191 991 00 35	Supporting ring	4	
36	10 120 919 01 18	Support, chromium-plated (for back rest)	4	
37	000 987 89 40	Buffer	4	
-	-	Lens-hd. countersunk screw AM 10x25 DIN 91 (for support at seat cushion frame)	4	
38	10 120 919 01 12	Stop angle, left	1	at driver's seat support
39	10 120 919 02 12	Stop angle, right	1	
-	-	Lens-hd. screw AM 6x15 DIN 7985	4	for stop angle at driver's seat support
-	-	Lock washer B 6 DIN 127	4	
40	000 990 22 91	Square cage nut	4	
41	10 120 910 01 90	Guide rail, outer	1	
42	10 120 919 03 37	Leaf spring	1	
-	-	Lens-hd. screw AM 4x10 DIN 7985	1	for leaf spring at guide rail
-	-	Lock washer B 4 DIN 127	1	
-	-	Hex. nut M 4 DIN 934-5 S	1	
43	10 120 910 02 90	Guide rail, inner	1	

Fig. No.	No. of spare part	Denomination	Quantity	Remarks
44	10 120 919 03 37	Leaf spring	1	
-	-	Lens-hd. screw AM 4x10 DIN 7985	1	for leaf spring at guide rail
-	-	Lock washer B 4 DIN 127	1	
-	-	Hex. nut M 4 DIN 934-5 S	1	
45	10 136 919 01 35	Guide rail, inner	1	
46	10 136 919 02 35	Guide rail, outer	1	
47	000 994 09 45	Clip	16	for guide rail at driver's seat support
-	-	Hex. -hd. screw S 6,3x16 DIN 7976	16	
-	10 120 910 01 02	Driver's seat, left nettle cloth covered	1	driver's seat without padding with guide rail and shift lock, however, without cover
-	10 120 910 02 02	Driver's seat, right nettle cloth covered	1	
-	10 120 910 01 06	Seat cushion, left) nettle cloth covered	1	
-	10 120 910 02 06	Seat cushion, right)	1	
-	10 120 910 00 07	Back rest, left and right nettle cloth covered	2	

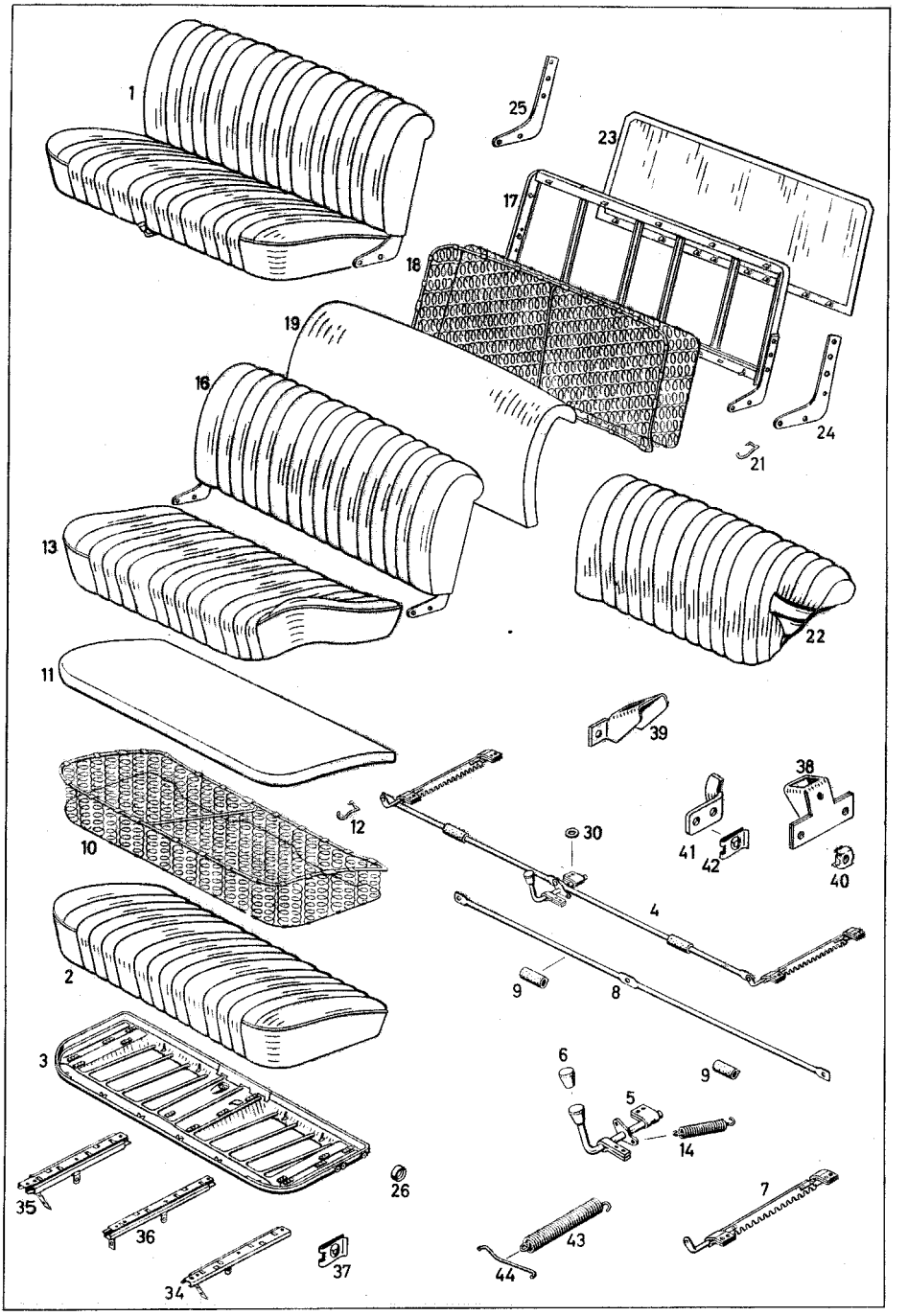
1
25
23
17
18
19
16
24
21
13
22
11
39
38
12
10
30
41
42
40
4
2
9
8
3
6
9
5
14
35
26
7
36
43
37
34
44

Fig. No.	No. of spare part	Denomination	Quantity	Remarks
		DRIVER'S SEAT BENCH		
		upon request installed instead of left and right driver's seats		
1	10 120 910 45 01	Driver's seat, bench-type (driver's seat bench ready for installation with adjuster and sliding seat fitting)	1	) state body No. and colour of interior lining when ordering
2	10 120 910 21 30	Seat cushion, bench-type (padding with artificial leather)	1	)
3	10 120 910 12 22	Seat cushion frame	1	
-	000 994 09 45	Clip	6	) for fixing sliding seat fitting
-	000 994 08 45	Clip	6	)
-	000 994 15 45	Clip (for fixing adjuster)	6	
4	10 120 910 19 05	Adjuster, seat adjustment	1	
5	10 120 910 20 05	Handle (for adjuster)	1	
6	12 136 919 00 60	Adjuster handle (button)	1	
-	-	Screw M 4x8 DIN 427	1	
7	10 120 910 21 05	Adjuster left and right outside (at driver's seat bench)	2	
8	10 120 919 00 27	Connection rod (for adjuster)	1	

Fig. No.	No. of spare part	Denomination	Quantity	Remarks
9	000 983 00 20	Felt hose 50 mm long (over connection rod)	2	state length when ordering
-	-	Lens-hd. screw with extension M 5x4 DIN 923 (for connection rod at handle and adjuster, left and right)	3	
-	-	Lens-hd. screw S 4,8x16 DIN 7981	12	
10	10 120 910 04 40	Spring core (for seat cushion, bench-type)	1	
11	10 120 914 00 14	Layer (rubber fiber) (on spring core)	1	
12	000 984 20 61	Clamp (for layer at spring core)	12	
13	10 120 910 00 46	Cover (sewn) (for seat cushion, bench-type)	1	state colour and body No. when ordering
14	10 120 912 03 36	Tension spring (for adjuster at seat bench)	1	
16	10 120 910 24 32	Back rest, bench-type (with back rest rail)	1	state body No. and colour of cover when ordering
17	10 120 910 15 34	Back rest frame bench-type (with back rest rail)	1	

Fig. No.	No. of spare part	Denomination	Quantity	Remarks
18	10 120 910 00 41	Spring core (for back rest)	1	
19	10 120 914 01 16	Layer (rubber fiber mat) (on spring core)	1	
21	000 984 20 61	Clamp (for support at spring core)	14	
22	10 120 910 00 47	Cover, bench-type (for back rest)	1	) state body No.) and colour of) interior lining) when ordering)
23	10 120 910 04 39	Lining (for back rest, rear) (at seat bench)	1	)
24	10 120 913 11 26	Back rest rail, left chromium-plated	1	
25	10 120 913 12 26	Back rest rail, right chromium-plated	1	
-	-	Hex.-hd. screw M 8x12 DIN 933-8 G	6	)) for back rest) rail at back
-	-	Washer 8,4 DIN 125	6	) rest frame)
-	-	Lock washer B 8 DIN 127	6	)
26	191 991 00 35	Supporting ring	4	
-	-	Lens-hd. screw AM 10x20 DIN 85 chromium-plated	4	)) for back rest) at seat cushion)
-	-	Lock washer B 10 DIN 127	4	)

Fig. No.	No. of spare part	Denomination	Quantity	Remarks
34	10 120 910 15 05	Sliding seat fitting, outside, left	1	)))
35	10 120 910 16 05	Sliding seat fitting, outside, right	1	)at driver's)seat bench)
36	10 120 910 14 05	Sliding seat fitting, center	1	)
-	-	Lens-hd.screw S 6, 3x16 DIN 7981 (for sliding seat fitting at driver's seat bench)	12	
37	000 994 09 45	Nut	8	))
-	-	Hex.-hd. screw S 6, 3x16 DIN 7976	8	))for driver's) seat bench
-	-	Hex.-hd. screw M 6x15 DIN 933-8 G	3	) at driver's seat) layer)
-	-	Lock washer B 6 DIN 127	3	)
38	10 120 919 01 31	Stop bracket, left	1	))for locking
39	10 120 919 02 31	Stop bracket, right	1	) adjuster
40	000 990 22 91	Square cage nut M 6	4	)
-	-	Hex.-hd. screw M 6x15 DIN 933-8 G	4	)for locking)bracket at)driver's seat)layer
-	-	Lock washer B 6 DIN 127	4	)
41	10 120 919 03 12	Stop angle, left (stop for seat)	1	

Fig. No.	No. of spare part	Denomination	Quantity	Remarks
42	000 994 09 45	Nut	2	)for locking
-	-	Hex. -hd. screw S 6,3x16 DIN 7976	2	)angle at) driver' s seat) layer, center
43	10 120 912 02 36	Tension spring, rear (at driver' s seat bench, center)	1	
44	10 120 912 01 14	Bracket (for tension spring)	1	
-	10 120 910 06 02	Driver' s seat, bench-type (driver' s seat bench) nettle cloth covered	1	
-	10 120 910 04 06	Seat cushion nettle cloth covered	1	
-	10 120 910 03 07	Back rest, bench-type nettle cloth covered (with back rest rail)	1	

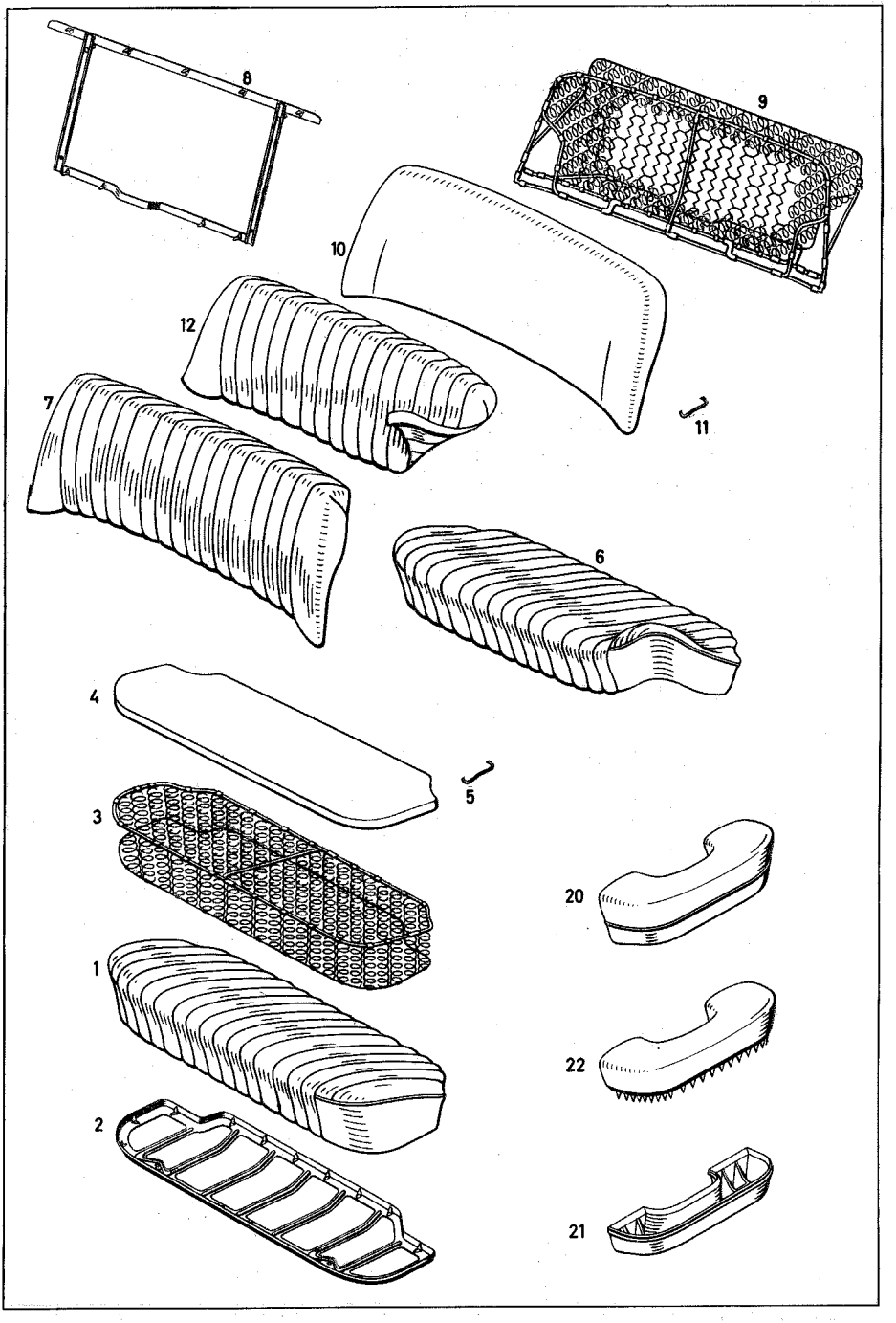
8
9
10
12
7
11
6
4
5
3
20
1
22
2
21

Fig. No.	No. of spare part	Denomination	Quantity	Remarks
		REAR SEAT		
1	10 120 920 02 20	Rear seat cushion, ready for installation	1	state colour and body No. when ordering
2	10 120 920 01 22	Seat cushion frame, rear seat	1	
3	10 120 920 01 40	Spring core, rear seat cushion	1	
4	10 120 924 01 14	Rubber fiber layer (for rear seat cushion)	1	
5	000 984 20 61	Clamp (for layer at spring core)	24	
6	10 120 920 01 46	Cover (sewn) (for rear seat cushion)	1	))state colour)and body No.
7	10 120 920 09 30	Rear seat back rest ready for installation	1	)when ordering)
8	10 120 920 06 32	Back rest frame, rear seat	1	
9	10 120 920 09 41	Spring core for rear seat back rest	1	
10	10 120 924 01 16	Rubber fiber layer, rear seat back rest	1	
11	000 984 20 61	Clamp (for layer at spring core)	14	
12	10 120 920 02 47	Cover (sewn) (for back rest, rear seat)	1	state colour and body No. when ordering
-	-	Washer A 6 DIN 9021	2	)for rear seat
-	-	Lock washer B 6 DIN 127	2	)back rest at
-	-	Hex. nut M 6 DIN 934-5 S	2	)rear floor)

Fig. No.	No. of spare part	Denomination	Quantity	Remarks
-	10 120 920 01 02	Rear seat cushion nettle cloth covered) without cover	1	
-	10 120 920 01 04	Rear seat cushion nettle cloth covered)	1	
		ARM REST		
20	10 120 970 00 01	Arm rest (for driver's door and rear door)	4	state colour and body No. when ordering
21	10 120 971 00 31	Support (for arm rest)	4	
22	10 120 970 01 01	Arm rest	4	state colour and body No. when ordering
-	-	Lens-hd. countersunk screw S 4, 2x38 DIN 7983 chromium-plated (for arm rest at support)	8	
-	-	Hex.-hd. screw M 6x25 DIN 933-8 G	8	) for support at driver's door and rear door
-	-	Lock washer B 6 DIN 127	8	)
-	-	Washer 6,4 DIN 433	8	)
-	000 990 22 91	Square cage nut	8	)

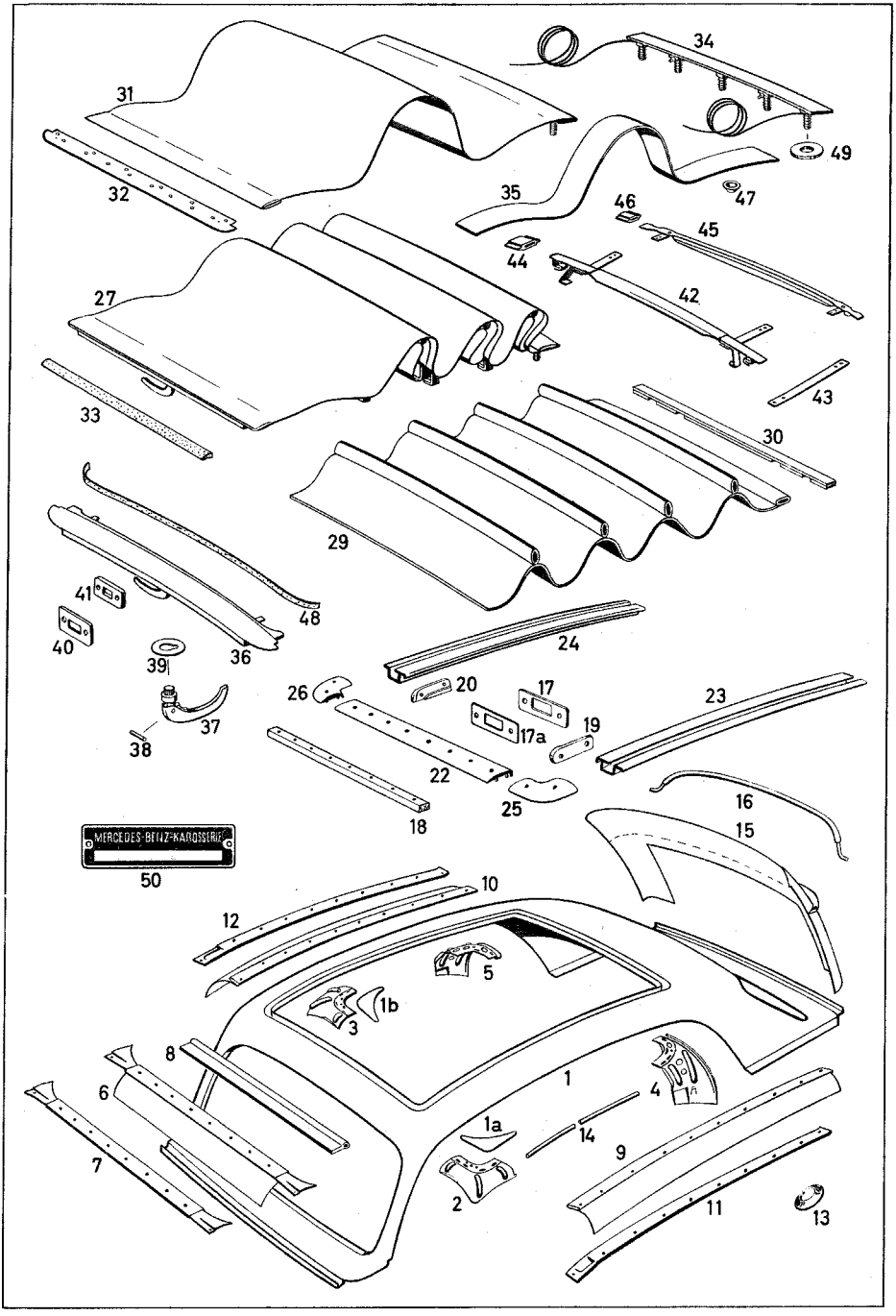
34
31
49
32
35
47
46
45
44
42
27
43
33
30
29
41
48
40
39
36
24
26
20
17
23
37
19
17a
38
22
25
16
18
15
MERCEDES-BENZ-KAROSSERIE
50
10
12
5
1b
3
8
1
4
6
1a
14
9
7
2
11
13

Fig. No.	No. of spare part	Denomination	Quantity	Remarks
		BODY, SHELL		
1	10 121 650 03 70	Roof panel (from engine hood up to rear lid)	1	
1a	10 120 651 01 17	Reinforcement, left	1	
1b	10 120 651 02 17	Reinforcement, right	1	
2	10 120 651 01 71	Angle, front, left	1	
3	10 120 651 02 71	Angle, front, right	1	
4	10 120 651 01 72	Angle, rear, left	1	
5	10 120 651 02 72	Angle, rear, right	1	
-	10 120 682 00 51	Damping, roof 70 x 6; 1,250 mm long (jute felt with paper intermediate layer)	1	
6	10 120 690 06 52	Covering, front	1	state colour and body No. when ordering
7	10 120 780 03 17	Cover rail, front	1	
8	10 120 780 01 98	Seal, front	1	state colour and body No. when ordering
-	-	Lens-hd. screw S 3, 9x9, 5 DIN 7981 (for covering and sealing, front at roof)	8	
9	10 120 690 07 52	Roof covering, left	1	state colour and body No. when ordering

Fig. No.	No. of spare part	Denomination	Quantity	Remarks
10	10 120 690 08 52	Roof panel, left	1	state colour and body No. when ordering
11	10 120 780 01 17	Cover rail, side, left	1	
12	10 120 780 02 17	Cover rail, side, right	1	
-	-	Lens-hd. screw S 3, 9x9, 5 DIN 7981	16	)))
-	-	Lens-hd. countersunk screw S 3, 9x16 DIN 7983, chrom. -plated	2	)))
13	-	Countersunk washer 4 N 56 d chromium-plated	2	)for covering)at roof, side)
-	-	Countersunk screw S 3, 9x9, 5 DIN 7982	4	)))
14	000 987 09 32	Rubber hose 3, 200 mm long (state length when ordering)	1	))
15	10 120 690 05 52	Roof panel, rear (sewn)	1	state colour and body No. when ordering
16	10 120 696 01 07	Bow, rear	1	
17	12 136 781 00 20	Anchor plate (at cowl, top, center)	1	
-	-	Countersunk screw AM 8x45 DIN 7987, chrom. -plated	2	))) for anchor) plate at roof
17a	10 187 781 01 29	Shim)) optional	a.r.	) frame, front)
-	10 187 781 02 29	Shim)	a.r.	)

Fig. No.	No. of spare part	Denomination	Quantity	Remarks
18	10 120 781 00 27	Spacer moulding (wood)	1	)
-	-	Lens-hd. countersunk screw S 3, 5x19 DIN 7983, chrom.-plated	8	) for cover rail) at roof
-	-	Countersunk screw S 3, 5x9, 5 DIN 7982, chrom.-plated	2	)
19	12 136 781 01 21	Curved fitting, left (at roof section, front)	1	
20	12 136 781 02 21	Curved fitting, right (at roof section, front)	1	
-	-	Countersunk screw AM 6x10 DIN 7987-4 S chromium-plated (for curved fitting at roof)	4	
22	10 120 781 00 13	Cover rail, front, chrom.-plated	1	
23	10 120 782 03 25	Guide rail, left) (slide rail)	1	
24	10 120 782 04 25	Guide rail, right)	1	
-	-	Countersunk screw S 3, 5x13 DIN 7982, chrom.-plated	14	))for guide rail)at roof, side
-	-	Countersunk screw S 3, 5x9, 5 DIN 7982, chrom.-plated	4	))
25	10 120 781 01 22	Angle plate, left	1	))at cowl, top
26	10 120 781 02 22	Angle plate, right	1	)
-	-	Countersunk screw S 3, 5x9, 5 DIN 7982, chrom.-plated (for angle plate at roof)	4	

Fig. No.	No. of spare part	Denomination	Quantity	Remarks
27	10 120 780 02 01	Sliding roof (movable part)	1	) state colour) and body No.) when ordering)
29	10 120 780 00 40	Dome (sewn)	1	
30	10 120 690 00 51	End rail (for dome mounting)	1	
31	10 120 780 02 20	Sliding roof cover, outer	1	state colour and body No. when ordering
32	10 120 781 03 14	Sheet metal rail, front	1	
33	000 987 20 33	Rubber profile, 950 mm long (sponge rubber strap)	1	state length when ordering
34	10 120 781 02 14	Sheet metal rail, rear	1	
35	10 120 784 01 20	Bow strap (sliding roof fabric) (at locking and intermediate bow)	2	
36	10 120 781 04 23	Steel locking bow	1	
37	10 120 783 01 84	Locking lever (handle) chromium-plated	1	
38	10 120 783 00 15	Joint pin (for locking lever at lock)	1	
39	10 120 783 00 85	Rosette, chromium-plated (for locking lever)	1	

Fig. No.	No. of spare part	Denomination	Quantity	Remarks
-	-	Countersunk screw AM 2, 6x8 DIN 63 chromium-plated	2	for rosette at locking bow
40	12 136 783 00 86	Ornamental plate, chrom.-plat. (at hook outlet, locking bow)	1	
41	10 120 783 00 97	Rubber plate (under ornamental plate)	1	
42	10 120 781 02 24	Intermediate bow (sliding bow)	3	
43	10 120 781 03 17	Strap	6	
44	000 781 00 30	Protective cap (for intermediate bow)	6	
45	10 120 781 02 25	Bow	4	
46	000 781 01 30	Protective cap (for bow)	8	
-	-	Countersunk screw S 3, 5x9, 5 DIN 7982 chromium-plated	16	for strap at lock and intermediate bow
47	000 990 19 42	Countersunk washer	16	
48	10 120 784 02 20	Sealing strap (sliding roof fabric) (at locking bow)	1	
-	-	Countersunk screw S 3, 9x13 DIN 7982 (for sliding roof at body, rear)	8	

Fig. No.	No. of spare part	Denomination	Quantity	Remarks
-	-	Countersunk washer 4 N 56 f	8	)
-	000 989 17 85	Rubber 25 x 1; 1,220 mm long (state length when ordering)	1	)
-	-	Hex. nut M 6 DIN 934-5 S	5	) for sliding roof at body, rear
-	-	Washer 7,4 DIN 125	5	)
-	-	Toothed washer A 6,4 DIN 6797	5	)
49	000 997 17 41	Gasket	12	)
-	-	Hollow rivet B 4x9x6 DIN 7331 (for sliding roof cover at belts, side)	6	
-	-	Hex.-hd. screw M 6x22 DIN 931-8 G	2	)
-	-	Lock washer B 6 DIN 127	2	) for wire cable at roof frame
-	-	Washer A 6 DIN 9021	4	)
50	-	Body number plate N 202 K	1	

PART NUMBER INDEX

No. of spare part	Page
Group 01	
121 010 00 00	3
121 010 11 08	3
121 010 03 10	5
121 010 10 13	6
121 010 19 20	9
121 010 20 20	9
121 010 01 23	3
121 010 06 23	3
121 010 03 30	13
180 010 00 40	14
180 010 00 66	6
121 010 00 70	13
121 010 02 70	14
121 010 00 72	6
180 010 00 94	14
180 011 06 05	6
121 011 01 11	3
121 011 04 11	3
180 011 01 33	5
120 011 00 52	3
120 011 01 52	3
120 011 02 52	3
120 011 03 52	3
180 011 01 79	6
121 015 00 05	5
121 015 01 21	5
121 015 02 21	5
121 016 03 20	13
121 016 00 60	9
180 016 00 60	4
180 016 01 60	4
620 016 00 60	9
121 016 00 80	14

No. of spare part	Page
Group 03	
121 030 35 01	16
121 030 37 01	16
121 030 39 01	16
121 030 03 05	17
121 030 02 17	23
121 030 03 17	23
121 030 04 17	24
121 030 05 17	24
121 030 06 17	25
121 030 15 20	20
121 030 05 97	18
121 030 06 97	18
121 030 07 97	19
121 030 08 97	19
121 030 09 97	20
621 030 00 97	18
621 030 01 97	18
621 030 02 97	19
621 030 03 97	19
621 030 05 97	20
121 031 01 07	16
180 031 04 25	16
186 031 00 33	17
180 031 00 52	16
180 031 01 52	16
180 031 02 52	16
180 031 03 52	16
180 031 04 52	16
121 031 00 53	17
121 031 06 71	17
186 031 02 71	17
120 031 01 81	17
121 032 00 05	17
121 032 00 15	17
121 033 14 01	18

No. of spare part	Page
121 033 15 01	18
121 033 16 01	19
121 033 17 01	19
121 033 18 01	20
621 033 00 01	18
621 033 01 01	18
621 033 02 01	19
621 033 03 01	19
621 033 04 01	20
121 033 14 02	18
121 033 15 02	18
121 033 16 02	19
121 033 17 02	19
121 033 18 02	20
621 033 00 02	18
621 033 01 02	18
621 033 02 02	19
621 033 03 02	19
621 033 04 02	20
001 037 38 16	23
001 037 39 16	23
001 037 40 16	24
001 037 41 16	24
001 037 42 16	25
001 037 43 16	23
001 037 44 16	23
001 037 45 16	24
001 037 46 16	25
001 037 47 16	25
000 037 00 17	23
000 037 01 17	24
000 037 02 17	25
000 037 03 17	25
000 037 11 17	23
000 037 29 18	23
000 037 36 18	24
000 037 37 18	25

10/024

No. of spare part	Page
000 037 38 18	25
000 037 69 18	24
121 038 07 10	20
121 038 08 10	21
121 038 09 10	21
121 038 10 10	21
121 038 11 10	21
121 038 28 10	20
121 038 29 10	21
121 038 30 10	21
121 038 31 10	21
121 038 32 10	21
121 038 07 11	21
121 038 08 11	22
121 038 09 11	22
121 038 10 11	22
121 038 11 11	22
121 038 28 11	21
121 038 29 11	22
121 038 30 11	22
121 038 31 11	22
121 038 32 11	22
186 038 07 50	20
186 038 08 50	20
121 038 03 71	20
182 038 00 72	20
Group 05	
121 050 00 01	27
180 050 01 09	30
121 050 01 10	30
121 050 03 11	29
180 050 07 16	28
180 050 08 16	28
180 050 05 23	30
180 050 06 23	30

No. of spare part	Page
121 050 00 24	12
121 050 01 24	12
121 050 02 24	12
121 050 03 24	12
121 050 04 24	12
121 050 05 24	12
180 050 03 33	31
180 050 03 34	31
180 050 00 74	29
180 050 01 74	29
121 050 06 97	10
121 050 07 97	10
121 050 08 97	11
180 051 15 10	10
180 051 16 10	10
180 051 17 10	11
180 051 16 12	10
180 051 17 12	10
180 051 18 12	11
180 051 16 16	10
180 051 17 16	10
180 051 18 16	11
180 052 03 01	27
180 052 03 02	28
180 052 02 03	16
121 052 00 05	27
180 052 04 06	28
180 052 10 06	6
	27
121 052 00 10	28
121 052 01 10	28
180 052 02 32	29
121 052 00 34	29
180 052 00 35	29
180 052 00 50	30
186 052 00 52	27
186 052 01 52	27

No. of spare part	Page
186 052 02 52	27
186 052 03 52	27
186 052 04 52	27
186 052 02 71	30
121 052 02 74	30
180 052 09 74	29
180 052 10 74	29
180 052 00 76	28
180 052 01 76	28
180 052 03 80	29
121 053 00 01	30
121 053 01 05	30
180 053 03 20	30
180 053 03 22	30
180 053 01 27	31
121 053 02 31	9
121 053 03 31	9
121 053 02 32	9
121 053 03 32	9
180 053 06 60	31
121 053 01 62	31
121 055 02 05	31
180 055 14 10	31
180 055 15 10	31
180 055 01 50	31
180 055 04 71	31
180 055 05 71	31
180 055 07 71	31
180 055 01 75	31
180 055 00 93	31
Group 07	
000 070 06 21	34
000 070 07 21	34
000 070 08 21	41
000 070 09 21	42

No. of spare part	Page	No. of spare part	Page	No. of spare part	Page
121 070 02 22	44	000 071 38 34	38	000 071 55 71	35
121 070 05 22	44	000 071 31 35	38	000 071 66 71	40
121 070 03 24	44	000 071 55 35	38	000 071 69 71	36
121 070 02 32	44	000 071 15 36	38	000 071 70 71	41
000 070 00 40	41	000 071 14 37	39	000 071 73 71	42
000 070 01 46	39	000 071 03 39	39	000 071 04 72	34
000 070 07 52	43	000 071 05 41	38		35
000 070 08 52	40	000 071 19 42	38		37
121 070 00 55	43	000 071 20 42	38		42
000 070 01 67	36	000 071 08 43	37	000 071 06 72	41
000 070 07 73	39	000 071 01 44	42	000 071 07 72	41
000 070 02 76	40	000 071 10 49	38	000 071 08 72	38
000 071 54 01	34	000 071 04 53	38	000 071 13 72	41
000 071 20 04	42	000 071 01 57	36		42
000 071 01 09	39	000 071 05 60	38	000 071 01 76	34
000 071 04 10	34		39		35
000 071 11 10	37	000 071 00 62	35		37
000 071 12 10	35		42	000 071 03 77	37
000 071 17 11	34	000 071 07 62	36	000 071 04 80	38
000 071 18 11	35	000 071 00 70	39	000 071 05 80	39
000 071 19 11	37	000 071 01 70	39	000 071 18 80	40
000 071 13 12	34	000 071 02 70	39	000 071 19 80	36
000 071 06 15	41	000 071 03 70	39	000 071 20 80	42
000 071 08 15	34	000 071 24 71	43	000 071 04 86	39
000 071 05 16	40	000 071 32 71	38	000 071 00 91	37
000 071 12 16	35	000 071 35 71	36	000 072 00 23	41
	40		39	000 072 00 40	41
000 071 14 16	43		43	000 072 00 41	41
000 071 03 20	38	000 071 36 71	34	136 072 00 50	36
000 071 04 22	34		37		282
000 071 06 22	37	000 071 40 71	40		283
000 071 21 22	36	000 071 41 71	40	000 072 00 53	34
000 071 22 22	36	000 071 42 71	35	188 072 00 74	52
000 071 12 24	40	000 071 43 71	35	000 073 03 02	43
000 071 13 24	42	000 071 44 71	37	000 073 02 05	40
000 071 14 30	41		41	000 073 02 46	40
000 071 18 34	38	000 071 45 71	36	000 073 00 57	40

10/024

No. of spare part	Page
Group 09	
180 090 01 44	49
000 091 53 01	46
000 091 02 07	46
180 091 01 08	49
180 091 01 12	65
000 091 01 15	46
000 091 08 15	46
000 091 11 15	48
000 091 16 15	46
000 091 00 16	47
000 091 01 18	46
000 091 04 19	47
000 091 00 21	46
000 091 04 28	46
000 091 00 29	47
000 091 04 29	46
000 091 00 31	47
000 091 00 36	46
000 091 08 39	47
000 091 01 46	47
000 091 00 50	46
180 091 01 50	49
000 091 03 56	48
000 091 08 71	48
000 091 01 80	47
000 091 06 80	47
180 091 01 80	49
181 091 00 80	48
181 091 00 81	48
000 091 00 85	48
180 091 00 91	49
001 094 22 02	49
000 094 38 04	49
000 094 39 06	49
000 094 17 41	50
000 094 01 55	49
000 094 00 76	50
000 094 36 80	49
000 094 37 80	49
	50
000 094 38 80	50
000 094 39 80	50
Group 14	
121 140 09 01	52
121 140 02 11	52
186 140 00 27	53
188 141 01 62	43
121 142 00 80	53
121 142 02 80	53
186 143 01 05	53
120 143 02 06	53
186 143 02 07	53
153 143 00 10	53
181 143 03 50	52
Group 15	
121 150 00 07	59
180 150 01 07	6
	60
180 150 06 18	62
121 150 01 19	62
180 150 01 24	59
198 150 00 29	60
121 150 00 32	56
121 150 00 35	61
000 151 77 01	55
120 151 00 12	55
000 151 20 13	55
000 151 14 14	55
000 151 07 50	55
000 151 08 50	55
000 151 05 93	55
000 152 10 11	55
000 154 48 02	55
000 154 55 06	56
	194
000 154 27 14	55
000 154 02 50	194
000 154 06 93	55
180 155 07 15	56
180 155 08 15	56
121 155 01 23	57
121 155 00 28	57
121 155 04 35	56
121 155 00 53	57
121 155 00 72	57
120 155 00 81	56
	57
136 155 00 81	178
120 155 00 82	56
	57
136 155 00 82	178
000 156 11 01	59
000 158 51 01	58
000 158 06 02	58
000 158 00 03	63
	195
000 158 03 09	59
180 158 04 12	61
000 158 04 18	59
000 158 03 30	58
000 158 06 31	58
000 158 04 32	58
000 158 03 33	58
000 158 00 34	58
181 158 01 37	61

No. of spare part	Page
000 158 02 40	195
000 158 03 40	58
000 158 04 40	58
121 158 00 51	61
186 158 00 51	60
000 158 00 52	59
000 158 04 52	59
000 158 00 59	59
000 158 02 60	59
186 158 00 70	60
000 158 04 74	59
000 158 01 76	59
186 158 00 83	60
186 158 01 83	60
000 158 04 89	58
000 159 16 03	62
000 159 17 03	62
000 159 00 38	62
000 159 00 85	62
Group 18	
121 180 09 01	65
121 180 03 07	65
121 180 01 08	65
121 180 01 10	66
121 180 01 15	67
121 180 06 52	65
159 181 00 42	67
180 181 01 50	65
121 181 00 95	65
000 184 35 01	66
000 184 58 01	66
121 184 01 08	66
000 184 05 12	66
000 184 00 15	66
181 184 01 17	66
000 184 22 25	66
181 184 00 30	66
181 184 00 56	66
000 184 06 80	66
121 184 00 80	67
121 186 00 80	65
Group 20	
180 200 10 01	69
121 200 01 05	17
180 200 00 19	71
121 200 01 58	70
180 200 00 60	69
180 201 03 01	70
180 201 04 05	69
180 201 02 07	69
180 201 04 10	69
180 201 00 18	70
312 201 01 18	69
312 201 01 19	69
180 201 01 51	69
312 201 03 58	69
312 201 02 59	69
180 201 00 80	70
180 202 00 14	70
180 203 01 08	70
180 203 06 31	71
000 203 65 75	183
180 203 03 80	70
180 203 04 80	70
180 203 05 80	71
180 205 02 06	71
121 205 01 10	70
121 206 01 17	17
Group 22	
121 220 08 16	75
121 220 09 16	75
121 220 00 71	76
121 223 18 04	75
121 223 19 04	75
120 223 04 12	75
120 223 05 12	75
	76
136 224 01 66	102
121 224 00 82	76
121 224 00 84	76
Group 24	
186 240 01 21	102
Group 25	
121 250 03 03	78
121 250 02 04	78
121 250 00 05	79
121 250 01 15	80
180 250 00 56	80
120 251 00 71	79
000 252 11 06	78
187 252 04 10	78
000 252 09 13	78
000 252 00 20	78
136 252 00 24	78
000 252 04 27	78
000 252 00 35	78
000 252 00 51	78
000 252 04 72	78
000 252 03 74	78
121 254 00 10	80

No. of spare part	Page
120 254 00 58	79
120 254 00 97	79
Group 26	
121 260 25 01	82
186 260 00 11	82
186 260 07 14	90
186 260 08 14	90
180 260 07 15	96
120 260 20 16	87
121 260 00 20	83
121 260 00 21	87
120 260 01 24	82
120 260 03 25	82
186 260 00 28	91
120 260 25 33	97
120 260 29 33	97
120 260 21 37	93
136 260 00 37	82
180 260 02 37	95
186 260 00 37	91
120 260 09 44	84
120 260 02 45	85
120 260 04 45	84
186 260 01 50	91
	93
180 260 02 78	94
186 260 02 79	91
180 260 02 81	94
180 260 01 82	93
120 260 21 94	94
120 260 01 95	94
186 261 00 52	90
186 261 01 52	90
186 261 00 60	87
183 261 04 74	95
186 261 01 79	93
186 261 04 79	87
120 261 00 80	88
186 262 12 05	84
120 262 07 11	86
120 262 07 12	85
120 262 08 23	86
120 262 09 23	85
120 262 03 26	85
186 262 02 26	88
120 262 05 35	85
120 262 08 35	84
186 262 07 36	84
	85
186 262 14 36	85
194 262 00 40	84
	86
186 262 08 45	88
186 626 04 51	83
136 262 04 52	87
136 262 05 52	87
136 262 06 52	84
136 262 07 52	84
136 262 08 52	84
136 262 09 52	87
120 262 11 62	86
120 262 12 62	86
120 262 13 62	86
120 262 14 62	86
120 262 15 62	86
120 262 16 62	85
120 262 17 62	85
120 262 18 62	85
120 262 19 62	85
120 262 20 62	85
120 262 23 62	84
186 262 01 62	86
186 262 02 62	86
186 262 03 62	86
186 262 04 62	86
186 262 05 62	86
186 262 06 62	86
186 262 07 62	86
186 262 08 62	86
186 262 00 66	83
186 262 01 73	88
120 262 00 81	86
136 262 00 94	83
120 263 06 10	83
120 263 00 13	82
136 263 00 23	82
186 263 00 30	82
120 263 03 50	82
120 263 08 52	83
120 263 14 52	83
120 263 15 52	83
120 263 16 52	83
121 264 00 30	87
121 264 00 31	88
120 264 04 32	88
153 264 00 55	87
186 265 00 01	91
186 265 00 02	91
136 265 02 04	92
136 265 04 04	92
136 265 05 04	92
136 265 00 07	92
183 265 00 46	90
136 265 02 47	90
136 265 00 48	90
136 265 00 51	92
136 265 01 51	92
136 265 02 51	92
136 265 00 53	92
136 265 01 53	92

No. of spare part	Page
184 265 00 53	92
136 265 02 72	91
136 265 00 81	93
180 268 02 05	97
180 268 03 05	96
186 268 00 07	90
180 268 02 15	96
186 268 02 15	96
180 268 00 24	94
180 268 00 32	95
183 268 01 33	91
186 268 00 33	91
180 268 01 39	93
186 268 00 40	94
186 268 01 40	94
183 268 00 52	91
180 268 00 57	94
000 268 00 66	96
186 268 02 73	93
186 268 02 74	94
180 268 00 80	97
183 268 00 92	94
180 268 01 97	96
180 268 03 97	94
Group 29	
120 290 25 16	99
180 290 01 18	99
180 290 04 21	100
121 290 05 22	102
120 290 10 23	101
121 290 00 33	99
120 290 07 34	101
120 290 03 46	100
136 290 00 67	102
120 291 00 51	101
121 291 00 82	102
120 291 02 88	101
120 291 03 88	101
120 291 03 97	102
180 292 00 32	151
120 292 05 50	99
153 292 00 82	101
120 293 05 06	99
180 293 01 11	80
120 293 05 17	201
120 293 02 32	102
121 293 08 40	103
120 293 01 43	100
180 293 00 76	102
120 293 01 88	99
120 293 02 88	99
120 293 03 88	100
Group 30	
121 300 03 20	105
180 300 06 30	106
180 300 00 32	106
121 301 06 01	105
121 301 02 15	105
121 301 00 18	105
121 301 00 82	105
180 301 00 97	105
120 302 04 01	106
120 302 08 01	304
121 302 00 14	105
180 302 00 72	106
Group 32	
121 320 03 31	109
180 320 00 44	109
120 321 14 04	108
121 321 00 07	108
120 322 00 84	108
000 323 56 00	108
000 323 60 00	108
120 323 00 44	108
120 323 00 67	108
181 323 00 68	108
180 323 00 83	109
	110
181 323 00 84	108
120 323 06 85	109
121 323 00 85	108
180 323 01 85	109
180 323 03 85	110
180 323 04 85	110
121 324 20 04	109
121 324 21 04	109
180 325 03 15	109
180 325 04 15	109
180 325 01 44	109
180 325 00 52	109
000 326 41 00	110
Group 33	
120 330 07 03	116
120 330 04 07	115
120 330 05 07	115
120 330 12 08	114
120 330 13 08	114
180 330 22 20	112
180 330 23 20	112
180 330 07 25	113
121 330 02 42	112
120 330 04 48	116
120 330 05 48	116

No. of spare part	Page
121 330 06 48	117
121 330 07 48	117
120 330 01 55	118
120 330 01 57	114
120 330 09 61	204
120 330 01 87	116
121 330 02 98	112
121 330 03 98	112
120 331 00 72	204
120 332 05 06	112
180 332 01 48	112
120 332 00 51	112
136 332 00 52	113
136 332 01 52	113
136 332 02 52	113
136 332 08 52	113
136 332 09 52	113
136 332 10 52	113
120 332 02 60	112
120 332 01 62	113
120 332 02 62	113
120 333 05 09	113
120 333 00 30	115
120 333 02 30	115
120 333 02 48	115
120 333 03 48	115
120 333 05 48	115
120 333 04 53	118
120 333 19 65	118
180 333 01 65	118
180 333 02 65	118
181 333 01 65	112
186 333 00 65	117
120 333 00 71	117
120 333 00 73	116
120 333 03 74	115
120 333 04 74	115
120 333 01 80	115
181 333 01 80	115
	116
120 334 03 15	114
180 334 00 62	114
180 334 01 62	114
180 334 01 64	113
120 334 07 72	114
120 338 01 15	116
120 338 00 57	117
	169
120 338 00 63	116
120 338 01 97	117
	169
Group 35	
180 350 10 00	120
180 350 12 00	120
180 350 13 10	127
180 350 14 10	127
180 350 05 13	125
180 350 07 13	126
180 350 32 19	125
180 350 44 19	125
180 350 01 20	120
180 350 05 23	120
180 350 00 29	129
180 350 01 29	129
180 350 07 32	129
180 350 01 33	205
180 350 02 39	121
180 350 03 40	121
180 350 01 45	122
120 350 00 66	122
180 350 08 75	129
180 350 09 75	129
136 350 01 90	93
180 350 02 90	125
180 351 04 40	130
180 351 05 40	130
180 351 13 40	130
180 351 14 40	130
180 351 03 43	131
180 351 07 44	131
180 351 10 45	130
180 351 00 48	131
180 351 01 50	125
180 351 03 51	128
180 351 05 52	128
180 351 13 52	128
180 351 14 52	128
180 351 15 52	128
180 351 16 52	128
180 351 17 52	128
180 351 18 52	128
180 351 19 52	128
180 351 01 53	128
180 351 06 53	131
180 351 11 53	129
183 351 01 70	122
180 351 03 73	130
180 351 00 74	128
180 351 06 74	127
180 351 00 76	131
121 351 01 86	130
180 351 05 86	130
180 351 09 86	128
180 351 01 96	130
120 352 07 65	130
120 352 08 65	131
120 352 05 67	131
120 352 00 72	131
120 352 05 76	130

No. of spare part	Page
120 352 06 76	130
180 353 05 01	120
180 353 03 08	122
183 353 00 14	121
180 353 05 15	120
180 353 00 21	121
136 353 05 24	121
180 353 06 25	121
180 353 08 25	121
180 353 00 40	122
180 353 01 48	122
120 353 24 52	123
120 353 26 52	123
120 353 28 52	123
120 353 30 52	123
120 353 32 52	123
120 353 34 52	123
120 353 36 52	123
120 353 38 52	123
120 353 40 52	123
120 353 42 52	123
120 353 44 52	123
120 353 45 52	123
180 353 30 52	126
180 353 31 52	126
180 353 33 52	126
180 353 35 52	126
180 353 37 52	126
180 353 39 52	126
180 353 41 52	126
180 353 43 52	126
180 353 45 52	126
180 353 47 52	126
180 353 49 52	126
180 353 10 62	120
180 353 11 62	120
180 353 12 62	120
180 353 13 62	120
180 353 14 62	120
180 353 00 63	122
180 353 01 73	121
180 353 02 73	121
180 353 03 73	121
180 353 05 73	121
180 353 06 73	121
183 353 03 73	127
136 353 02 74	121
180 353 00 76	126
180 357 00 13	125
120 357 01 14	125
153 357 00 26	127
180 357 00 52	125
120 357 00 58	146
120 357 01 79	146
180 357 05 91	126
Group 40	
121 400 01 02	133
180 400 04 26	133
186 400 17 94	133
186 400 18 94	133
186 400 19 94	133
186 400 20 94	133
186 400 21 94	133
186 400 22 94	133
186 400 23 94	133
186 400 24 94	133
186 400 25 94	133
186 400 26 94	133
186 400 27 94	133
186 400 28 94	133
186 400 29 94	133
186 400 30 94	133
186 401 00 25	134
120 401 01 71	113
	127
180 401 00 74	133
120 401 01 83	133
120 403 00 02	134
136 403 03 02	264
Group 41	
180 410 11 01	136
121 410 22 02	136
121 410 11 03	136
186 410 04 30	136
180 410 01 31	136
	137
180 410 03 39	137
180 411 06 15	138
184 411 00 17	136
136 411 00 18	136
136 411 01 18	136
186 411 09 45	137
120 411 00 60	138
180 411 02 62	138
186 411 01 71	138
186 411 05 71	137
180 411 00 76	136
180 413 01 01	136
180 413 01 12	137
180 413 01 51	136
120 413 05 61	138
Group 42	
120 420 10 12	160
180 420 16 16	140
180 420 17 16	140

No. of spare part	Page
180 420 12 17	145
180 420 13 17	145
000 420 50 18	147
000 420 72 18	141
000 420 73 18	141
121 420 00 20	140
121 420 01 20	145
121 420 02 20	145
121 420 03 20	145
121 420 04 26	158
121 420 05 26	155
121 420 06 26	158
120 420 02 27	175
	187
120 420 02 28	152
180 420 03 28	152
180 420 08 28	142
120 420 10 29	152
180 420 07 29	142
180 420 08 29	142
180 420 01 30	153
180 420 02 30	153
120 420 03 32	152
180 420 01 37	153
180 420 00 42	146
180 420 01 42	146
000 420 07 55	156
000 420 08 55	141
	148
120 420 04 85	160
180 420 06 85	161
180 420 08 85	161
120 420 04 86	160
180 420 01 86	153
120 420 17 88	160
180 420 03 90	148
180 420 04 90	148
180 420 06 90	161
120 420 05 91	160
180 421 08 01	114
	127
180 421 05 10	140
	145
180 421 03 18	142
180 421 00 32	140
	145
180 421 01 37	140
120 421 02 56	143
120 421 03 56	143
120 421 04 56	143
120 421 05 56	143
180 421 02 71	140
180 421 03 71	140
	146
180 421 00 74	140
000 421 00 83	147
000 421 16 83	141
000 421 00 86	147
000 421 05 86	141
000 421 00 87	147
000 421 08 87	141
	156
000 421 10 87	141
000 421 16 87	141
000 421 04 88	147
000 421 09 88	141
000 421 06 89	147
000 421 14 89	141
000 421 09 90	147
000 421 10 90	141
000 421 08 97	148
180 423 05 50	145
120 423 01 56	146
180 423 02 71	145
180 423 02 74	147
183 423 06 74	147
000 423 01 84	158
136 423 00 92	147
120 427 01 15	165
187 427 00 19	160
120 427 00 27	201
180 427 05 41	201
180 427 06 41	201
120 427 00 42	148
120 427 04 50	160
187 427 00 52	148
187 427 01 53	148
120 427 02 74	201
120 427 03 74	160
120 427 00 86	160
000 428 00 26	158
000 428 01 26	157
000 428 07 26	142
	148
000 428 07 30	158
000 428 29 35	152
000 428 30 35	152
000 428 31 35	153
000 428 00 37	158
000 428 03 73	152
	153
121 429 01 34	158
000 429 05 37	152
180 429 00 41	158
Group 43	
000 430 40 01	150
000 430 49 01	155
180 430 00 02	151
000 430 12 30	155

No. of spare part	Page
000 430 00 68	156
000 430 03 81	150
000 430 06 81	155
000 430 08 81	157
000 430 01 83	150
000 430 02 83	156
000 430 03 83	155
000 431 07 33	151
000 431 00 34	151
000 431 01 35	151
000 431 03 35	150
	155
000 431 02 40	151
121 431 00 40	205
000 431 17 76	150
000 431 20 76	155
000 431 09 85	150
000 431 14 85	155
000 431 15 86	150
000 431 26 86	150
	155
000 431 32 86	155
000 431 33 86	155
000 431 34 86	150
000 431 05 91	150
	155
000 431 14 92	150
	155
000 431 31 93	150
000 431 41 93	155
000 435 03 12	156
180 435 11 40	158
000 435 04 80	157
000 425 05 80	157
000 435 06 80	156
000 435 11 82	156
000 435 15 82	158
000 435 02 83	157
000 435 05 84	156
000 435 03 86	156
000 435 04 86	157
000 435 05 86	157
Group 46	
120 460 31 01	163
121 460 09 05	169
120 460 16 08	163
120 460 40 09	165
120 460 08 10	164
186 460 01 11	163
186 460 05 15	164
180 460 31 16	165
120 460 10 19	168
120 460 04 35	205
121 460 02 35	112
120 460 08 37	167
120 460 18 38	168
186 460 03 40	166
187 460 01 44	167
120 460 02 45	166
181 460 04 46	166
120 460 02 65	168
186 461 07 05	163
120 461 04 06	163
120 461 01 08	164
120 461 05 80	163
000 462 02 23	168
000 462 00 32	167
120 462 01 37	163
183 462 00 46	165
120 462 05 50	163
120 462 01 60	165
000 462 02 70	168
000 462 00 72	168
000 462 01 75	168
120 462 01 85	164
000 462 02 93	168
180 462 03 96	97
180 462 08 96	94
120 463 05 01	164
000 463 15 32	169
120 463 02 33	169
120 463 02 50	168
120 464 04 01	166
120 464 06 01	166
153 464 00 23	167
181 464 00 28	167
182 464 00 62	167
181 464 00 71	166
153 464 00 72	167
181 464 01 86	167
181 464 00 90	166
Group 47	
120 470 20 01	171
120 470 01 21	172
120 470 03 25	172
120 470 00 70	174
120 470 01 86	171
120 471 23 15	172
120 471 04 20	171
120 471 00 22	172
120 471 06 35	173
186 471 01 80	171
120 471 02 81	173
120 471 03 81	173
120 471 04 81	173
136 476 00 26	174
184 476 00 26	172

No. of spare part	Page
120 476 07 46	174
120 476 01 84	175
000 477 55 01	173
000 477 56 01	174
000 477 36 15	174
000 477 37 15	173
000 477 02 16	174
000 477 07 16	174
000 477 03 18	174
000 477 09 18	174
000 477 16 80	174
000 477 19 80	173
Group 49	
121 490 08 15	177
121 490 04 20	177
121 490 08 35	177
120 490 00 40	179
121 490 01 44	79
121 491 03 01	177
121 491 05 01	177
180 491 02 01	177
120 491 02 40	177
181 492 00 11	177
121 492 01 14	178
180 492 04 16	178
180 492 00 17	177
120 492 01 18	179
	180
121 492 00 53	178
121 492 01 80	177
120 492 04 82	179
	180
120 492 00 83	179
	180
Group 50	
121 500 03 03	182
000 500 05 40	182
120 500 00 85	182
121 500 00 91	184
186 501 01 15	182
136 501 00 54	13
	173
000 501 01 81	182
121 504 00 38	183
121 504 02 40	182
121 504 03 40	182
120 504 01 82	182
120 504 00 84	182
Group 52	
120 524 11 33	103
187 527 00 72	304
Group 54	
121 540 01 05	186
121 540 01 07	186
180 540 00 08	186
180 540 00 09	166
121 540 01 23	186
180 540 00 30	186
180 540 00 31	186
120 540 17 38	187
136 540 04 41	187
153 540 00 42	165
120 540 00 44	191
	269
120 540 02 44	272
180 540 03 50	190
120 540 00 58	272
121 540 00 59	194
180 540 06 60	193
180 540 08 60	193
120 540 00 95	266
120 540 01 95	266
000 541 46 01	186
120 541 01 24	186
121 542 02 01	192
000 542 71 02	192
000 542 44 03	192
120 542 05 04	171
001 542 44 05	192
001 542 43 06	192
120 542 03 07	194
120 542 03 11	192
000 542 44 20	195
000 542 73 20	195
120 542 02 80	192
000 544 05 02	270
000 544 18 02	270
120 544 00 26	267
120 544 00 31	266
000 544 23 32	193
000 544 30 32	267
000 544 00 74	271
000 544 01 74	272
000 544 11 80	271
000 544 28 80	271
000 544 09 89	270
000 544 29 89	270
000 544 38 89	270
000 544 42 89	270
000 544 10 90	270
000 544 38 90	271
000 544 03 91	271
000 544 14 91	271

No. of spare part	Page
000 544 16 91	271
000 544 17 91	271
000 544 21 91	272
000 544 16 92	271
000 544 22 92	271
000 544 05 93	271
000 544 17 93	271
000 544 13 94	267
	274
120 544 00 95	266
120 544 01 95	266
000 545 02 03	190
000 545 02 06	95
000 545 22 09	151
	194
000 545 04 12	194
000 545 17 14	192
183 545 00 19	192
000 545 10 24	192
000 545 06 28	186
000 545 08 31	192
000 545 16 34	194
120 545 01 37	272
120 545 02 37	191
	263
	269
136 545 01 58	194
120 545 00 72	191
	263
	269
120 545 02 72	272
120 545 03 72	192
120 545 01 76	167
	277
000 545 00 80	186
000 546 00 35	96
000 546 02 35	187
	195
136 546 00 35	186
159 546 00 37	62
000 546 06 41	187
000 546 18 41	95
	187
000 546 19 41	187
180 546 00 43	187
120 546 00 81	190
120 546 01 82	189
Group 58	
121 580 00 03	197
136 580 00 10	197
183 580 01 93	197
000 581 01 17	197
198 581 00 36	197
120 581 01 46	197
120 581 00 60	197
120 581 06 65	197
000 583 35 15	197
000 583 02 47	197
186 585 00 01	197
Group 61	
10 120 610 01 10	202
10 120 610 02 10	202
10 120 610 00 12	202
10 180 610 01 13	203
10 180 610 02 13	203
10 120 610 00 16	203
10 120 610 02 17	201
10 120 610 00 18	202
10 120 610 00 25	203
10 180 610 00 31	202
10 120 610 00 36	201
10 120 610 00 37	204
10 120 610 00 38	203
10 120 610 00 58	203
10 120 610 01 62	204
10 120 610 08 66	205
10 120 610 03 75	204
10 120 610 04 75	204
10 120 610 01 77	201
10 120 610 02 77	201
10 120 610 03 77	202
10 120 610 04 77	202
10 121 610 00 79	204
10 120 611 03 20	203
10 120 611 04 20	203
10 120 611 01 21	202
10 120 611 02 21	202
10 120 611 03 21	203
10 120 611 04 21	203
10 120 611 01 22	202
10 120 611 02 22	202
10 120 611 03 22	202
10 120 611 04 22	203
10 120 611 00 33	202
10 120 611 01 47	202
10 120 612 01 21	201
10 180 612 02 21	201
10 120 612 00 23	202
10 120 612 00 31	201
10 121 612 01 43	201
10 121 612 02 43	201
10 180 612 00 43	202
10 180 612 01 43	202
10 120 616 01 26	204
10 120 616 02 26	204
10 120 616 03 26	204
10 120 616 04 26	204
10 120 616 05 26	204
10 120 616 06 26	204
10 120 616 07 26	205

No. of spare part	Page
10 120 616 08 26	205
10 120 616 09 26	205
10 120 616 01 67	204
10 120 616 02 67	204
10 120 616 07 69	205
10 120 616 08 69	205
10 120 616 00 70	205
10 120 616 01 70	205
10 120 616 02 70	205
10 120 616 00 76	204
Group 62	
10 121 620 00 05	207
10 120 620 05 06	207
10 120 620 01 11	207
10 120 620 02 11	207
10 120 620 05 11	207
10 120 620 06 11	207
10 120 620 01 19	207
10 120 620 02 19	207
10 120 620 09 61	207
10 121 620 02 61	207
10 120 620 05 71	207
10 120 620 06 71	207
10 120 620 01 72	208
10 120 620 02 72	208
10 120 621 01 13	207
10 120 621 02 13	207
10 120 621 03 13	207
10 120 621 04 13	208
Group 64	
10 120 640 00 05	208
10 120 640 01 59	208
10 120 640 02 59	208
10 120 640 01 66	208
10 120 640 02 66	208
10 120 640 00 71	209
10 120 640 01 75	208
10 120 640 02 75	208
10 120 646 01 18	209
10 120 646 02 18	209
10 120 646 01 63	208
10 120 646 02 63	208
10 120 647 01 34	209
10 120 647 02 34	209
10 120 647 00 37	259
Group 65	
10 120 650 01 11	209
10 120 650 02 11	209
10 121 650 00 70	209
10 121 650 03 70	325
10 120 650 01 72	209
10 120 651 01 17	325
10 120 651 02 17	325
10 120 651 01 71	325
10 120 651 02 71	325
10 120 651 01 72	325
10 120 651 02 72	325
10 120 657 00 09	209
10 180 657 00 71	209
Group 67	
10 121 670 00 51	211
10 120 671 00 10	211
10 120 671 01 10	211
10 120 671 00 20	211
10 120 671 00 30	211
10 120 671 03 51	211
10 120 671 06 51	211
10 120 671 07 51	211
10 120 678 00 10	211
10 120 678 00 20	211
10 120 678 00 30	211
Group 68	
10 120 680 01 08	222
10 120 680 02 08	222
10 120 680 00 09	222
10 120 680 03 11	219
10 120 680 01 25	214
10 120 680 02 25	214
10 120 680 06 25	214
10 120 680 01 28	214
10 120 680 02 28	214
10 120 680 05 29	214
10 120 680 06 29	217
10 120 680 08 29	214
10 120 680 09 29	217
10 121 680 01 56	216
10 180 680 01 58	216
10 120 680 00 75	220
10 180 680 01 76	214
10 180 680 02 76	215
10 120 680 04 83	218
10 120 680 01 84	218
10 120 680 03 87	218
10 120 680 04 87	218
10 121 680 00 96	219
10 120 682 01 01	213
10 120 682 02 01	213
10 120 682 00 02	213
10 120 682 01 04	213
10 120 682 02 04	213
10 120 682 00 05	213
10 120 682 01 06	213

No. of spare part	Page
10 120 682 00 07	213
10 120 682 00 08	213
10 120 682 00 09	213
10 120 682 01 09	213
10 120 682 02 09	214
10 180 682 01 10	214
10 120 682 01 12	213
10 120 682 02 12	213
10 120 682 02 13	213
10 120 682 00 14	213
10 120 682 00 16	213
10 120 682 00 51	217
	325
10 120 684 01 02	222
10 120 684 02 02	222
10 120 684 01 04	223
10 120 684 01 05	223
10 120 684 00 06	222
10 120 684 02 13	222
10 120 684 00 14	223
10 120 686 05 80	224
10 120 686 06 80	224
10 180 687 00 12	214
	215
10 186 687 00 37	223
10 121 687 01 70	216
10 180 687 00 70	216
10 180 687 01 70	214
10 180 687 02 70	215
10 180 687 03 70	216
10 180 687 04 70	216
10 180 687 01 97	216
10 180 687 02 97	217
10 120 688 07 06	217
10 120 688 08 06	217
10 120 688 01 20	217
10 120 688 02 20	217

No. of spare part	Page
10 120 689 00 24	219
10 120 689 02 39	219
10 120 689 00 41	219
10 120 689 00 70	218
10 120 689 01 71	220
10 120 689 05 85	218
10 120 689 06 85	218
Group 69	
10 120 690 00 49	224
10 120 690 00 50	225
10 120 690 02 50	225
10 120 690 00 51	328
10 120 690 05 52	326
10 120 690 06 52	325
10 120 690 07 52	325
10 120 690 08 52	326
10 180 690 00 71	226
10 180 690 01 71	226
10 120 694 01 61	224
10 120 694 02 61	224
10 120 695 01 35	224
10 120 695 02 35	224
10 120 695 03 35	225
10 120 695 04 35	225
10 120 695 05 35	225
10 120 695 06 35	225
10 120 695 00 40	226
10 120 696 01 01	225
10 120 696 01 02	225
10 120 696 01 03	225
10 120 696 01 05	225
10 120 696 01 06	226
10 120 696 01 07	226
	326
10 121 698 05 01	227

No. of spare part	Page
10 121 698 06 01	227
10 121 698 07 01	227
10 121 698 08 01	227
10 180 698 01 41	227
10 180 698 00 80	226
10 180 698 01 81	226
10 180 698 02 81	226
Group 72	
10 121 720 01 02	229
10 121 720 02 02	229
10 180 720 07 04	240
	254
10 180 720 08 04	240
	254
10 180 720 03 05	229
10 180 720 04 05	229
10 180 720 01 14	234
10 180 720 02 14	234
10 120 720 03 16	234
10 120 720 04 16	234
10 180 720 03 17	236
10 180 720 04 17	236
10 180 720 01 18	238
10 180 720 02 18	238
10 180 720 05 35	230
10 180 720 19 35	230
10 180 720 22 35	230
10 120 720 01 37	229
10 120 720 02 37	229
10 120 720 01 38	230
10 120 720 02 38	230
10 120 720 01 43	229
10 120 720 02 43	229
10 120 720 00 45	251
10 180 720 03 45	238

No. of spare part	Page
10 120 720 09 51	239
10 120 720 10 51	239
10 180 720 01 55	234
10 180 720 02 55	234
10 180 720 03 55	235
10 180 720 04 55	235
10 180 720 05 55	235
10 180 720 06 55	235
10 121 720 01 70	241
10 121 720 02 70	241
10 121 720 01 73	241
10 121 720 02 73	241
10 120 720 01 78	240
10 120 720 02 78	240
10 180 720 03 80	239
10 180 720 04 80	239
10 120 720 00 81	239
10 180 720 04 92	231
10 180 720 00 93	231
10 120 723 02 05	240
	255
10 120 723 03 05	240
	255
10 120 723 04 05	240
	255
10 120 723 01 24	231
	246
10 120 723 01 41	229
10 120 723 02 41	229
10 120 723 01 42	229
10 120 723 02 42	229
10 120 723 01 44	230
10 120 723 02 44	230
10 120 723 01 45	230
10 120 723 02 45	230
10 120 723 00 52	229
	230
	244
	245

No. of spare part	Page
10 180 723 00 55	231
	246
	247
10 180 723 00 56	230
	245
10 180 723 01 56	246
10 180 723 02 56	231
	246
10 180 723 00 76	240
	255
10 180 723 00 78	231
	246
10 120 723 00 82	229
	230
	244
	245
10 180 723 00 96	240
	254
10 180 723 02 99	240
	254
10 180 725 03 02	237
10 180 725 04 02	237
10 180 725 05 02	238
10 180 725 06 02	238
10 180 725 01 10	238
10 180 725 00 18	236
10 180 725 09 24	235
10 180 725 10 24	235
10 180 725 03 48	235
10 180 725 03 55	234
10 180 725 04 55	234
10 180 725 01 62	235
10 180 725 01 65	237
10 180 725 02 65	237
10 120 725 01 72	237
10 120 725 02 72	237
10 180 725 03 79	235

No. of spare part	Page
10 180 725 04 79	235
10 120 725 00 80	239
	251
10 180 725 03 80	236
10 180 725 04 80	236
10 180 725 03 82	235
10 180 725 04 82	235
10 180 725 00 84	236
10 121 727 01 82	241
10 121 727 02 82	241
12 136 727 01 90	237
	253
10 120 727 01 93	241
10 120 727 02 93	241
Group 73	
10 121 730 01 02	244
10 121 730 02 02	244
10 121 730 01 05	244
10 121 730 02 05	244
10 120 730 03 16	249
10 120 730 04 16	249
10 120 730 01 18	251
10 120 730 02 18	251
10 120 730 13 35	245
10 120 730 14 35	245
10 180 730 07 35	245
10 180 730 08 35	230
	245
10 120 730 01 37	244
10 120 730 02 37	244
10 120 730 01 38	245
10 120 730 02 38	245
10 120 730 01 43	244
10 120 730 02 43	244
10 120 730 01 51	252

No. of spare part	Page
10 120 730 02 51	252
10 121 730 01 70	253
10 121 730 02 70	253
10 121 730 01 73	253
10 121 730 02 73	254
10 120 730 01 78	253
10 120 730 02 78	253
10 121 730 01 80	252
10 121 730 02 80	252
10 120 730 00 81	252
10 120 730 05 92	246
10 120 730 05 93	246
10 120 730 06 93	246
10 180 733 00 13	246
10 180 733 00 18	246
10 120 733 01 41	244
10 120 733 02 41	244
10 120 733 01 42	244
10 120 733 02 42	244
10 120 733 01 44	245
10 120 733 02 44	245
10 120 733 01 45	245
10 120 733 02 45	245
10 120 735 09 02	250
10 120 735 10 02	250
10 120 735 11 02	250
10 120 735 12 02	250
10 120 735 01 10	251
10 120 735 01 55	250
10 120 735 02 55	250
10 120 735 00 65	250
10 120 737 01 30	253
10 120 737 02 30	253
10 121 737 00 82	254
10 121 737 01 82	254
10 120 737 01 93	253
10 120 737 02 93	253
10 120 737 03 93	224

No. of spare part	Page
Group 75	
10 120 750 01 23	257
10 120 750 00 75	257
10 120 750 05 75	257
10 120 750 00 77	258
10 120 750 00 79	258
10 120 750 00 84	257
10 120 750 01 85	257
10 120 750 04 87	257
10 120 758 00 03	259
10 120 758 00 15	257
10 120 758 02 15	258
10 120 758 01 27	258
10 120 758 03 90	259
Group 76	
10 120 760 03 10	259
10 120 760 04 10	259
10 120 760 05 19	259
10 120 760 06 19	259
10 180 760 01 61	233
	247
10 180 760 02 61	233
	247
10 180 760 00 81	234
	247
10 120 761 01 36	208
10 180 766 03 01	232
10 180 766 03 02	248
10 180 766 04 02	232
	248
10 120 766 00 05	233
	249
10 120 766 03 05	233
	249

No. of spare part	Page
10 120 766 04 05	233
	249
000 766 03 06	232
	291
10 120 766 01 15	232
	248
10 180 766 00 15	233
	247
10 180 766 00 22	232
	233
	248
	249
10 180 766 03 26	232
10 180 766 04 26	233
	248
10 180 766 01 27	232
	248
10 180 766 02 27	232
	248
10 180 766 00 29	232
	233
	248
	249
10 180 766 01 31	232
	233
	248
	249
000 766 00 35	231
	246
10 120 766 02 58	231
	247
10 180 766 00 99	232
	233
	248
	249
10 180 766 01 99	232
	233
	248
	249

No. of spare part	Page
10 120 768 02 02	238
	251
12 136 768 00 03	238
	251
12 136 768 00 15	238
	251
Group 78	
10 120 780 02 01	328
10 120 780 01 17	326
10 120 780 02 17	326
10 120 780 03 17	325
10 120 780 02 20	328
10 120 780 00 40	328
10 120 780 01 98	325
10 120 781 00 13	327
10 120 781 02 14	328
10 120 781 03 14	328
10 120 781 03 17	329
12 136 781 00 20	326
12 136 781 01 21	327
12 136 781 02 21	327
10 120 781 01 22	327
10 120 781 02 22	327
10 120 781 04 23	328
10 120 781 02 24	329
10 120 781 02 25	329
10 120 781 00 27	327
10 187 781 01 29	326
10 187 781 02 29	326
000 781 00 30	329
000 781 01 30	329
10 120 782 03 25	327
10 120 782 04 25	327
10 120 783 00 15	328
10 120 783 01 84	328
10 120 783 00 85	328
12 136 783 00 86	329
10 120 783 00 97	329
10 120 784 01 20	328
10 120 784 02 20	329
Group 81	
40 186 810 00 09	262
10 120 810 05 10	262
10 180 810 01 17	262
10 120 810 03 30	263
10 120 810 19 30	263
10 121 810 00 30	263
10 121 810 01 30	263
10 180 810 00 30	263
10 120 810 05 57	264
10 191 811 00 15	262
10 120 811 01 25	262
10 120 811 00 41	262
10 191 811 00 42	262
10 120 811 00 52	262
000 811 00 68	262
10 120 813 04 33	263
10 180 813 00 33	254
10 121 817 00 14	219
10 121 817 00 15	264
10 121 817 00 26	264
Group 82	
10 120 820 00 01	269
10 120 820 01 12	266
40 121 820 00 13	266
10 180 820 01 22	274
10 180 820 02 22	274
10 120 820 10 43	267
10 120 820 17 43	267
10 120 820 01 62	272
10 120 820 02 62	272
10 120 820 01 63	273
10 120 820 02 63	273
10 180 820 01 64	274
10 180 820 02 64	274
10 120 820 00 66	273
10 180 820 00 71	274
10 186 820 00 84	273
000 821 00 51	266
000 821 02 52	270
10 121 824 00 01	267
10 120 824 03 05	268
10 120 824 05 05	268
10 120 824 04 06	268
10 120 824 13 07	267
10 120 824 14 07	267
10 120 824 01 23	268
10 120 824 01 26	268
000 824 00 27	269
10 120 824 03 28	268
000 824 00 71	267
000 824 05 75	267
10 121 824 00 83	268
10 121 824 00 96	267
10 120 824 00 98	268
10 120 824 02 99	268
10 120 825 00 09	269
11 120 825 04 51	270
000 825 02 52	270
000 825 09 53	270
10 120 826 03 35	299
10 120 826 01 40	299
10 120 826 00 66	273
10 186 826 00 68	273
10 186 825 00 69	273
10 180 826 00 71	274
10 186 826 00 91	273
10 180 826 02 97	274

No. of spare part	Page
Group 83	
10 120 830 03 01	277
10 120 830 04 01	277
11 120 830 02 08	284
10 120 830 01 15	281
10 121 830 00 16	281
10 120 830 07 18	277
10 120 830 01 29	278
10 120 830 11 33	281
10 120 830 12 33	281
10 180 830 00 36	282
10 120 830 05 42	279
10 120 830 00 50	280
10 121 830 00 50	215
10 120 830 05 54	279
10 120 830 06 54	279
10 120 830 04 62	277
10 120 830 17 62	277
10 120 830 00 68	281
10 120 830 01 68	281
10 120 831 00 15	279
10 120 831 00 24	279
10 120 831 00 26	278
10 120 831 00 32	279
10 120 831 00 33	277
10 120 831 00 34	279
10 186 831 00 34	279
10 120 831 00 43	277
10 120 831 00 48	277
10 120 831 00 82	277
10 120 831 01 88	278
10 120 831 02 88	278
12 136 831 00 89	282
	283
12 136 831 00 90	283
10 120 831 00 94	280
10 120 831 01 94	280
10 120 831 00 97	280
10 120 831 01 97	280
10 120 831 05 99	278
10 120 831 06 99	278
10 120 833 01 31	283
10 120 833 03 31	282
10 120 833 04 31	282
10 180 833 00 91	282
10 120 835 05 01	279
10 120 835 06 01	279
10 120 835 01 28	284
000 835 01 75	284
10 120 835 01 85	284
10 120 835 00 92	280
000 835 00 98	279
10 121 838 07 36	284
10 121 838 08 36	284
10 121 838 09 36	285
10 121 838 10 36	285
10 121 838 11 36	285
10 121 838 12 36	285
Group 88	
10 120 880 03 18	288
10 120 880 04 18	288
10 120 880 05 22	290
10 120 880 08 22	290
10 120 880 00 25	290
10 120 880 05 29	302
10 120 880 06 29	302
10 120 880 01 31	292
10 120 880 02 31	292
10 120 880 01 40	293
10 120 880 03 43	294
10 120 880 04 43	294
10 120 880 01 48	299
10 120 880 02 48	299
10 120 880 00 55	297
10 120 880 07 55	298
10 120 880 08 55	298
10 121 880 00 57	302
10 120 880 04 59	304
10 120 880 02 60	303
10 120 880 03 60	303
10 120 880 05 60	303
10 120 880 01 64	304
10 120 880 00 72	297
	298
10 120 880 01 72	297
	298
10 120 880 00 75	303
10 180 880 03 83	305
10 180 880 00 85	306
10 180 880 00 88	305
10 120 880 00 94	289
10 120 880 00 98	291
10 120 881 00 13	289
10 120 881 04 94	288
10 120 881 05 94	288
10 120 881 06 94	288
10 120 881 13 94	289
10 120 881 14 94	289
10 120 882 00 18	288
	291
10 120 882 03 94	291
10 120 882 05 94	290
10 120 882 06 94	290
10 120 882 07 94	290
10 120 882 08 94	291
10 120 882 09 94	290
10 120 882 10 94	290
10 120 883 01 18	293

No. of spare part	Page
10 120 883 02 18	293
10 120 883 02 91	289
10 120 883 06 91	293
10 120 883 07 91	289
	293
10 120 883 08 91	289
	293
10 120 883 09 91	289
10 120 883 10 91	289
10 120 883 00 92	292
10 120 883 01 93	293
10 120 883 02 93	293
10 121 884 01 22	293
10 121 884 02 22	293
10 120 884 00 94	294
10 120 884 00 98	294
10 121 885 00 01	297
10 120 885 05 02	298
10 120 885 01 40	297
10 120 885 02 40	297
10 120 885 00 43	297
	299
10 120 885 02 82	300
10 120 885 01 96	300
10 120 885 00 97	300
10 120 887 00 49	302
10 120 887 01 49	302
10 120 887 00 56	303
10 120 887 01 56	303
10 120 887 04 58	302
10 120 887 05 58	302
10 120 887 00 78	302
10 120 887 02 78	302
10 120 887 02 79	302
10 180 887 03 93	305
10 120 887 00 94	302
10 120 887 01 94	302
10 180 888 00 09	306
10 180 888 00 12	306
10 180 888 00 13	306
10 180 888 01 17	306
10 180 888 02 21	307
10 180 888 10 22	307
10 180 888 11 22	307
10 120 888 00 34	307
10 120 888 02 34	307
10 180 888 00 71	226
10 180 888 00 97	306
10 121 888 00 98	306
Group 89	
10 120 890 00 10	205
	260
10 120 890 01 10	208
	260
10 120 890 00 92	259
10 120 899 00 21	259
10 120 899 00 97	259
Group 91	
10 120 910 39 01	309
10 120 910 40 01	309
10 120 910 45 01	315
10 120 910 01 02	313
10 120 910 02 02	313
10 120 910 06 02	319
10 120 910 14 05	318
10 120 910 15 05	318
10 120 910 16 05	318
10 120 910 17 05	310
10 120 910 18 05	310
10 120 910 19 05	315
10 120 910 20 05	315
10 120 910 21 05	315
10 120 910 01 06	313
10 120 910 02 06	313
10 120 910 04 06	319
10 120 910 00 07	313
10 120 910 03 07	319
10 120 910 09 22	309
10 120 910 10 22	309
10 120 910 12 22	315
10 186 910 03 29	309
10 120 910 16 30	309
10 120 910 17 30	309
10 120 910 21 30	315
10 120 910 17 32	310
10 120 910 24 32	316
10 120 910 02 34	310
10 120 910 15 34	316
10 120 910 02 39	311
10 120 910 04 39	317
10 120 910 04 40	316
10 120 910 05 40	309
10 120 910 06 40	309
10 120 910 00 41	317
10 120 910 06 41	311
10 120 910 00 46	316
10 120 910 07 46	310
10 120 910 08 46	310
10 120 910 00 47	317
10 120 910 06 47	311
10 120 910 01 56	310
10 120 910 02 56	310
10 120 910 01 90	312
10 120 910 02 90	312
10 187 912 01 12	309
10 187 912 02 12	309
10 120 912 01 14	319

No. of spare part	Page
10 120 912 02 36	319
10 120 912 03 36	316
10 120 913 11 26	317
10 120 913 12 26	317
10 120 914 00 14	316
10 120 914 01 14	310
10 120 914 02 14	310
10 120 914 01 16	317
10 120 914 02 16	311
10 120 919 01 12	312
10 120 919 02 12	312
10 120 919 03 12	318
10 120 919 00 13	311
10 120 919 00 15	311
10 120 919 01 18	312
10 120 919 00 23	311
10 120 919 00 27	315
10 120 919 01 31	318
10 120 919 02 31	318
10 136 919 01 35	313
10 136 919 02 35	313
10 136 919 01 36	309
10 136 919 02 36	309
10 120 919 03 37	312
	313
12 136 919 00 60	310
	315
Group 92	
10 120 920 01 02	322
10 120 920 01 04	322
10 120 920 02 20	321
10 120 920 01 22	321
10 120 920 09 30	321
10 120 920 06 32	321
10 120 920 01 40	321
10 120 920 09 41	321
10 120 920 01 46	321
10 120 920 02 47	321
10 120 924 01 14	321
10 120 924 01 16	321
Group 97	
10 120 970 00 01	322
10 120 970 01 01	322
10 120 971 00 31	322
Group 98	
000 981 16 01	122
000 981 14 05	121
000 981 01 10	91
000 981 18 10	101
000 981 21 10	95
000 981 22 10	94
000 981 08 12	85
000 981 09 12	85
120 981 02 12	86
120 981 03 12	85
000 981 03 18	163
136 981 02 25	87
180 981 00 25	127
000 981 04 27	122
000 981 07 27	122
180 981 00 86	126
000 983 06 10	239
	251
000 983 00 20	316
000 983 22 82	224
000 983 41 86	218
000 983 45 86	220
000 983 21 92	280
000 983 22 92	237
	253
000 983 23 92	253
000 984 03 33	302
120 984 01 37	238
	251
136 984 02 52	222
000 984 03 55	268
	269
	273
	288
000 984 17 55	234
	247
000 984 23 56	297
	299
000 984 24 56	238
	251
000 984 25 56	236
000 984 02 60	224
136 984 01 60	241
	254
000 984 20 61	310
	311
	316
	317
	321
000 985 07 30	237
	250
000 985 05 62	217
	241
	242
	254
000 985 06 62	259
	311
000 985 09 62	220
000 985 12 62	214
	217

No. of spare part	Page
000 987 09 32	193
	226
	326
000 987 20 33	328
000 987 47 35	297
	299
000 987 10 36	216
120 987 00 37	272
120 987 01 37	231
	246
	247
180 987 00 37	142
120 987 00 39	178
121 987 00 39	76
000 987 18 40	223
	288
	290
	305
000 987 30 40	300
000 987 35 40	290
000 987 41 40	234
	249
000 987 57 40	305
000 987 63 40	305
000 987 69 40	269
000 987 88 40	258
000 987 89 40	312
000 987 01 41	258
000 987 02 41	275
	277
000 987 12 41	226
000 987 13 41	226
	227
000 987 15 41	291
	295
000 987 19 41	257
	291

No. of spare part	Page
000 987 21 41	134
000 987 24 41	298
	300
000 987 29 41	211
	239
	252
000 987 02 44	223
000 987 03 44	223
120 988 00 10	100
186 988 00 10	102
000 988 01 72	106
	282
	283
000 988 16 78	191
000 988 17 78	189
000 988 24 78	237
	250
000 988 31 78	237
	250
000 988 32 78	234
	250
000 988 33 78	188
	189
000 988 34 78	188
	189
	192
	194
000 988 35 78	225
000 988 37 78	242
000 988 39 78	253
000 988 41 78	241
	242
	254
000 988 44 78	242
000 988 47 78	220
	300
000 988 49 78	175

No. of spare part	Page
000 988 50 78	307
000 988 51 78	241
000 988 55 78	193
000 988 58 78	220
000 988 59 78	239
	240
	252
	289
000 988 61 78	224
	242
	254
000 988 77 78	218
000 988 22 80	222
	223
000 988 23 80	222
000 989 17 85	330
000 989 45 85	294
000 989 46 85	288
	300
000 989 47 85	292
Group 99	
120 990 00 01	130
120 990 12 01	169
120 990 14 01	118
182 990 00 01	137
	138
183 990 01 01	121
000 990 12 05	291
120 990 04 05	302
121 990 00 05	79
136 990 08 05	52
186 990 00 10	133
180 990 02 15	122
180 990 00 17	105
000 990 12 20	202
000 990 14 20	203 204

No. of spare part	Page
000 990 18 20	41
120 990 09 20	129
120 990 10 20	114
	129
120 990 13 20	114
000 990 05 33	307
000 990 14 33	235
000 990 26 40	157
120 990 06 40	146
120 990 07 40	143
	146
120 990 09 40	169
120 990 13 40	115
120 990 28 40	99
120 990 31 40	194
120 990 32 40	116
121 990 01 40	57
120 990 36 40	99
121 990 12 40	3
136 990 13 40	235
136 990 82 40	91
153 990 06 40	258
180 990 01 40	28
180 990 02 40	30
180 990 03 40	27
180 990 06 40	28
180 990 09 40	140
	145
180 990 10 40	5
180 990 13 40	140
	146
180 990 23 40	94
180 990 24 40	140
	145
183 990 35 40	93
183 990 42 40	97
186 990 09 40	13
186 990 18 40	83
187 990 08 40	160
187 990 12 40	258
187 990 14 40	137
	138
312 990 03 40	95
000 990 17 42	222
000 990 19 42	329
000 990 05 47	35
	43
000 990 00 48	302
000 990 01 48	151
	233
	236
	249
	288
	289
	291
	292
	294
	303
000 990 02 48	235
000 990 03 48	306
000 990 04 48	302
000 990 05 48	238
	251
000 990 08 48	258
	288
	291
	292/293
120 990 02 48	101
120 990 03 48	101
180 990 01 50	123
000 990 08 51	43
	53
	71
000 990 49 51	66
000 990 54 51	100
120 990 04 51	164
120 990 05 51	163
153 990 02 51	31
180 990 02 51	130
000 990 04 52	297
	299
120 990 01 55	117
	169
181 990 00 55	115
120 990 00 59	114
	127
	134
186 990 00 60	137
120 990 00 77	166
000 990 02 88	157
000 990 22 91	190
	266
	269
	293
	294
	295
	312
	318
	322
000 990 25 91	194
	281
000 990 27 91	167
	231
	247
180 990 00 93	227
136 990 00 95	78
183 990 02 95	140
	145
186 991 07 01	4
	79

No. of spare part	Page
180 991 08 01	4
120 991 05 05	234
	249
186 991 02 05	151
120 991 02 07	218
120 991 03 15	87
180 991 00 22	97
198 991 00 29	101
191 991 00 35	312
	317
120 991 03 40	57
120 991 10 40	108
120 991 11 40	179
	180
120 991 19 40	269
180 991 06 40	56
	57
180 991 10 40	95
121 991 00 41	3
000 991 02 61	52
000 991 04 61	52
120 991 00 61	160
186 991 03 68	82
153 992 00 05	90
000 993 58 01	96
120 993 07 01	146
120 993 08 01	166
120 993 14 01	84
	85
120 993 24 01	164
121 993 02 01	29
136 993 08 01	60
136 993 31 01	92
180 993 11 01	69
180 993 22 01	133
180 993 23 01	141
180 993 26 01	90
181 993 06 01	66
182 993 08 01	94
184 993 04 01	136
186 993 11 01	30
186 993 13 01	92
186 993 17 01	67
186 993 24 01	60
186 993 37 01	167
194 993 00 01	140
	145
312 993 53 01	100
000 993 09 10	46
120 993 08 10	141
120 993 16 10	215
	279
120 993 17 10	192
121 993 02 10	103
180 993 10 10	99
180 993 11 10	147
180 993 12 10	147
180 993 14 10	160
180 993 17 10	105
186 993 35 10	43
120 993 00 20	165
120 993 01 25	80
181 993 02 25	53
120 994 00 01	148
000 994 02 10	35
	42
000 994 05 10	238
	251
120 994 00 10	121
180 994 01 10	122
181 994 00 10	169
120 994 03 12	166
120 994 04 12	130
180 994 01 12	129
120 994 00 13	118
120 994 00 15	116
120 994 01 15	85
181 994 00 15	113
000 994 01 21	257
	291
186 994 03 25	137
	138
180 994 00 30	121
000 994 18 35	150
000 994 20 35	156
000 994 21 35	157
120 994 01 35	125
120 994 02 35	122
120 994 04 35	125
120 994 06 35	125
120 994 07 35	126
120 994 08 35	126
136 994 06 35	84
136 994 07 35	84
136 994 09 35	84
000 994 04 37	174
000 994 00 41	46
000 994 07 41	155
180 994 03 41	129
182 994 00 43	137
120 994 00 44	122
000 994 00 45	219
000 994 04 45	218
	219
	220
000 994 05 45	305
000 994 06 45	279
000 994 07 45	277
000 994 08 45	315
000 994 09 45	313
	315

No. of spare part	Page	No. of spare part	Page	No. of spare part	Page
000 994 09 45	318	000 997 20 40	106	000 997 18 81	273
	319		191		282
000 994 12 45	258		269	000 997 22 81	62
000 994 13 45	219	000 997 28 40	43		188
	262	000 997 29 40	151		274
	263	000 997 34 40	157	000 997 27 81	188
000 994 15 45	310	120 997 11 40	164	000 997 30 81	188
	315	180 997 00 40	6	000 997 31 81	187
000 994 16 45	218	180 997 02 40	13	000 997 42 81	231
	219	180 997 03 40	136		247
	220	180 997 08 40	95	120 997 03 81	284
120 995 00 01	194	180 997 09 40	94	180 997 09 81	106
136 995 05 01	193	180 997 10 40	138	181 997 00 81	188
136 995 06 01	281	183 997 05 40	167	183 997 00 81	105
	282	191 997 00 40	173	186 997 05 81	193
	283	000 997 11 41	264	186 997 06 81	283
180 995 03 01	44	000 997 17 41	330		304
180 995 04 01	61	181 997 03 41	67	186 997 07 81	186
180 995 07 01	13	000 997 13 46	122	120 997 00 82	172
181 995 00 20	190	000 997 17 46	87	120 997 08 82	190
	191	000 997 18 46	113		193
186 995 02 20	189	000 997 44 46	156	120 997 11 82	171
	190	000 997 45 46	157	120 997 13 82	171
	191	000 997 46 46	157	180 997 10 82	14
	304	000 997 47 46	157	181 997 03 82	61
121 995 00 22	191	000 997 48 46	163	186 997 00 82	93
153 995 03 22	191	000 997 81 47	146	000 997 04 88	229
180 995 00 22	175	000 997 88 47	146		230
136 995 01 35	190	136 997 00 47	69		244
136 995 00 37	190	180 997 01 47	70		245
186 997 01 20	91	180 997 01 71	12	120 997 00 88	115
120 997 01 30	171	000 997 12 72	156		117
121 997 00 30	4	180 997 02 72	14		169
136 997 12 30	6	000 997 07 81	195	120 997 01 88	136
180 997 04 30	129	000 997 16 81	106		137
186 997 02 30	70	000 997 17 81	188	181 997 00 90	61
000 997 02 40	151	000 997 18 81	106	136 988 02 78	311

Standard	Dimension	Page
DIN		
7	2, 5 h8 x 6	112
	2, 5 h11 x 14	157
	6 h8 x 16	82
	8 h8 x 8	17
	8 h8 x 12	9
	8 h8 x 16	17
	10 h8 x 18	17
	1, 5 m6 x 8	29
	8 m6 x 16	4
	10 m6 x 14	4
	10 m6 x 16	4
63	AM 2, 6 x 8 chromium-plated	329
	AM 3, 5 x 8	46
84	AM 4 x 5	59
	AM 4 x 8	58
		97
		195
	AM 4 x 12	95
	AM 4x15	166
	AM 4 x 25	166
	AM 5 x 40	195
85	AM 4 x 15	156
	AM 5 x 15	47
		298
		300
	AM 10 x 20 chromium-plated	317
91	AM 6 x 12 chromium-plated	312
	AM 10 x 20 chromium-plated	311
	AM 10 x 25	312
DIN		
93	15	123
94	1 x 12	60
	1 x 18	167
	1, 5 x 10	37
		41
		42
		234
		250
	1, 5 x 12	160
		304
	1, 5 x 15	50
	2 x 12	160
		161
	2 x 15	44
		97
		105
	2 x 18	165
	2 x 25	117
		169
	3 x 15	103
		141
		147
	3 x 18	151
	3 x 25	131
	3 x 28	138
	3 x 35	115
	5 x 40	164
125	3, 2	307
	4, 2	37
	4, 3	103
		285
		286
		305
		306

Standard	Dimension	Page
DIN		
125	5, 3	60
		141
		147
		173
		258
		277
		304
	6, 4	42
		80
		278
		291
		295
	7, 4	100
		183
		330
	8, 4	44
		49
		50
		53
		61
		105
		147
		158
		168
		172
		177
		178
		179
		180
		290
		294
		297
		298
		317
	10, 5	53

Standard	Dimension	Page
DIN		
125	10, 5	88
		297
		298
		299
	13	79
		134
127	B 3	307
	B 3, 5	178
	B 4	40
		41
		59
		97
		156
		189
		190
		191
		195
		215
		281
		282
		283
		284
		285
		286
		304
		305
		306
		312
		313
	B 5	37
		41
		47
		53
		61
		172

Standard	Dimension	Page
DIN		
127	B 5	189
		194
		284
		304
	B 6	13
		28
		44
		62
		80
		91
		93
		96
		100
		105
		116
		148
		153
		175
		183
		186
		187
		190
		193
		194
		195
		216
		238
		251
		258
		259
		268
		269
		275
		277
		278

Standard	Dimension	Page
DIN		
127	B 6	281
		290
		295
		312
		318
		321
		322
		330
	B 7	95
		96
		100
		101
		109
		110
		123
		142
		146
		148
		152
		174
	B 8	28
		56
		57
		58
		75
		76
		78
		87
		95
		100
		108
		128
		138
		142
		143

STANDARD PART NUMBER INDEX

Standard	Dimension	Page
DIN		
127	B 8	146
		148
		150
		158
		163
		165
		177
		178
		179
		180
		182
		294
		297
		298
		317
	B 10	88
		116
		126
		129
		165
		168
		169
		193
		195
		297
		298
		299
		300
		317
	B 12	55
		56
		75
		79
		117
		131

Standard	Dimension	Page
DIN		
127	B 12	142
	B 14	27
		140
		145
137	A 4	239
		252
	A 5	215
	A 8	157
	B 5	171
		234
		236
		250
	B 6	65
		79
		88
		90
		161
	B 8	43
		48
		52
		65
		70
		71
		75
		88
		93
		172
		183
	B 10	6
		88
		306
		311
316	M 12 x 70	134
417	M 10 x 45	82

Standard	Dimension	Page
DIN		
427	M 4 x 8	315
433	4, 3	41
		282
		283
		305
	5, 3	215
		284
	6, 4	6
		322
	8, 4	7
		11
		13
		67
		71
		168
	10, 5	151
	13	14
		55
439	AM 3	273
	AM 5	278
443	16	27
	20	129
463	8, 4	96
471	10 x 1	101
	15 x 1	69
	20 x 1, 2	30
	26 x 1, 2	101
	32 x 1, 5	126
	35 x 2	83
472	12 x 1	67
	16 x 1	156
	19 x 1	156
	22 x 1	91

Standard	Dimension	Page
DIN		
472	48 x 1, 75	125
	55 x 2	137
553	M 4 x 6	278
561	AM 6 x 12	60
562	M 5	195
617	2, 5 x 11, 8	125
625	6004 X	165
	6006 X - C 3	136
	6202	17
		69
	6302	69
	6305 - C 3	83
	6306 ZN	83
660	2, 6 x 10 A1	94
	3 x 8	267
	3, 5 x 10	133
	4 x 10	303
	9 x 20	140
662	6 x 10	309
720	32206	113
	32303	114
835	M 7 x 22	79
	M 10 x 28	11
	M 10 x 52	11
906	M 16 x 1, 5	4
	M 20 x 1, 5	52
	M 24 x 1, 5	88
		120
		125
	M 30 x 1, 5	9

STANDARD PART NUMBER INDEX

Standard	Dimension	Page
DIN		
908	M 30 x 1, 5	9
912	M 6 x 12	5
		6
		13
	M 6 x 15	7
	M 6 x 18	5
	M 6 x 25	60
	M 8 x 20	13
	M 8 x 28	48
	M 8 x 30	7
		13
		49
		67
	M 8 x 45	61
	M 8 x 60	67
	M 8 x 90	7
	M 12 x 105-10 K	14
	M 12 x 125-10 K	13
923	M 5 x 4	316
	M 6 x 4	246
931	M 5 x 30 S	60
	M 6 x 12	47
	M 6 x 22	65
		330
	M 6 x 25	80
		91
		93
	M 6 x 30	88
		161
	M 6 x 35	65
	M 6 x 55	65
	M 6 x 60	278
	M 7 x 20	95
		96

Standard	Dimension	Page
DIN		
931	M 7 x 20	123
	M 7 x 22	142
	M 7 x 25	100
	M 7 x 30	101
	M 7 x 50	148
	M 8 x 25	87
	M 8 x 28 S	165
	M 8 x 30	93
		95
	M 8 x 32	56
	M 8 x 35	70
		165
	M 8 x 38	100
	M 8 x 40	58
		178
		180
	M 8 x 45	96
		148
		179
	M 8 x 50	179
		180
	M 8 x 55	177
	M 8 x 60	57
	M 8 x 80	177
	M 8 x 165	108
	M 10 x 28	195
	M 10 x 35	76
		129
	M 10 x 40	88
	M 12 x 40	75
	M 12 x 50	79
	M 12 x 55	79
	M 12 x 75-10 K	3
	M 12 x 80	55

Standard	Dimension	Page
DIN		
933	M 4 x 12	281
	M 4 x 15	281
	M 5 x 8	53
	M 5 x 10	61
		172
	M 6 x 10	62
		116
		193
	M 6 x 12	28
		44
		79
		122
		182
	M 6 x 15	105
		167
		195
		216
		258
		277
		288
		289
		291
		292
		293
		294
		295
		318
	M 6 x 15-12 K	100
	M 6 x 15 galvanized	70
	M 6 x 18	90
		96
		152
		153
	M 6 x 20	291
		292

Standard	Dimension	Page
DIN		
933	M 6 x 22	269
	M 6 x 25	322
	M 6 x 30	268
	M 7 x 15	109
	M 7 x 18	146
		174
	M 7 x 22	127
	M 8 x 10	61
	M 8 x 12	138
		143
		148
		317
	M 8 x 15	75
		76
		142
		146
	M 8 x 18	66
		71
		75
		108
		138
	M 8 x 20	78
		102
		164
		178
		179
	M 8 x 22	87
		88
		102
		150
		294
	M 8 x 25	75
		164
		302
	M 8 x 30	28
	M 10 x 15	6

Standard	Dimension	Page	Standard	Dimension	Page
DIN			DIN		
933	M 10 x 15	168	934	M 6	90
	M 10 x 22	127			91
		297			93
		299			105
	M 10 x 25	298			148
		299			153
	M 10 x 35	297			161
		299			175
					186
934	M 3	307			187
	M 4	189			236
		226			268
		227			275
		281			278
		282			288
		283			289
		284			290
		285			291
		286			292
		304			293
		305			294
		306			303
		312			321
		313			330
	M 5	44		M 7	100
		60			101
		61			109
		171			110
		215			142
		236			152
		273			183
		298		M 8	11
		300			29
	M 6	44			56
		65			57
		80			58

STANDARD PART NUMBER INDEX

Standard	Dimension	Page
DIN		
934	M 8	76
		95
		96
		100
		108
		129
		137
		138
		148
		150
		157
		158
		165
		172
		177
		178
		179
		180
		182
		258
		297
		298
	M 8 left	102
	M 10	82
		88
		116
		195
	M 10 x 1	109
		110
	M 12	55
		79
	M 12 x 1, 5	118
		131
	M 14 x 1, 5	113
935	M 6	50

Standard	Dimension	Page
DIN		
936	M 8	168
	M 10	102
		151
		193
	M 10 x 1	60
		169
	M 10 x 1, 5	306
	M 12 x 1, 5	56
		143
	M 14 x 1, 5	117
		151
	M 14 x 1, 5 left	117
	M 18 x 1, 5	166
937	M 8	165
	M 12 x 1, 5	137
		138
	M 22 x 1, 5	164
939	M 8x 18	5
		9
	M 8 x 20	11
	M 8 x 30	4
		11
		52
	M 8 x 35	52
960	M 10 x 1 x 160	67
	M 12 x 1, 5 x 35	131
	M 14 x 1, 5 x 40	27
961	M 12 x 1, 5 x 25	130
	M 12 x 1, 5 x 28	117
988	5 x 10 x 2	42
	10 x 16 x 1	101
1434	8 f8 x 18 x 1, 5	160
	8 f8 x 25 x 20	161

Standard	Dimension	Page
DIN		
1434	5 h11 x 14 x 11, 4	304
1472	2 x 14	235
1474	4 x 10 Ms	114
1476	3 x 6	71
		198
	4 x 8	23
		29
1481	3 x 20	53
	4 x 18	65
	6 x 18	78
2076	III 1, 5 dia	106
5401	5 mm III	29
	6, 5 mm III	84
		86
	7 mm III	156
	8 mm III	92
5417	Sp 72 A	87
6503	A 12 x 22 x 7	91
	A 18 x 30 x 7	169
6504	B 20 x 32 x 7	163
6797	A 3, 2	263
	A 4, 3	263
	A 6, 4	234
		237
		239
		247
		251
		330
	A 8, 4	138
		168
	J 6, 4	232

Standard	Dimension	Page
DIN		
6797	J 6, 4	233
		246
		248
		249
	V 3, 7	46
	V 4, 3	36
	V 6, 4	257
		259
		311
6798	V 5, 3	240
		255
6799	2, 3	279
	4	282
	6	14
	7	238
		251
6885	A 6 x 4 x 20	166
6888	3 x 3, 7	28
	3 x 5	56
	4 x 6, 5	27
	5 x 7, 5	16
7331	B 4 x 9 x 6	330
7341	A 6 h11 x 20	165
7603	A 4 x 8 fiber	36
	A 6 x 12 Al	61
	A 6 x 12 fiber	47
	A 8 x 12 Al	69
		71
	A 8 x 12 fiber	47
	A 10 x 14 Cu	142
		148
	A 12 x 16 Al	30
		79

Standard	Dimension	Page
DIN		
7603	A 12 x 16 fiber	43
		48
	A 14 x 18 Cu	156
		157
		158
	A 14 x 20 Cu	151
	A 16 x 20 Al	70
	A 16 x 22 Al	14
	A 18 x 22 Al	29
	A 20 x 24 Al	29
	A 20 x 26 Al	171
	A 22 x 27 Cu	150
		155
	A 22 x 27 fiber	157
	A 24 x 30 Al	4
	A 26 x 32 Cu	156
	A 26 x 34 Al	171
	A 30 x 36 Al	9
		12
	C 8 x 14 Cu-Asb.	14
	C 14 x 20 St. Asb.	63
	C 26 x 32 Cu-Asb.	6
	D 10 x 16 Al	67
	D 18 x 22 Al	66
7604	AM 8 x 1	69
	AM 10 x 1	164
	AM 12 x 1, 5	30
		48
7606	13 M 22 x 1, 5	14
	16 M 26 x 1, 5	71
7623	A 2/3	71
7627	6	43
		48
7972	S 2, 6 x 6, 5	227
DIN		
7974	Z 3, 5 x 6, 5	178
7976	S 6, 3 x 16	191
		313
		318
		319
	S 6, 3 x 22	258
7981	S 2, 9x6, 5	198
	S 2, 9x6, 5	264
	chromium-plated	284
	S 3, 5 x 9, 5	225
		292
	S 3, 5 x 9, 5	252
	chromium-plated	
	S 3, 5 x 13	239
	S 3, 5 x 13	252
	chromium-plated	
	S 3, 5 x 16	211
	chromium-plated	
	S 3, 5 x 22	211
	chromium-plated	
	S 3, 9 x 9, 5	153
		188
		325
		326
	S 3, 9 x 13	188
		190
	S 3, 9 x 16	219
	S 3, 9 x 19	188
	S 4, 2 x 9, 5	174
		175
		190
	S 4, 8 x 9, 5	191
	S 4, 8 x 13	279
		304
	S 4, 8 x 16	258

10/024

Standard	Dimension	Page
DIN		
7981	S 4, 8 x 16	277
		306
		316
	S 6, 3 x 16	318
	Z 2, 9 x 6, 5	219
	Z 3, 5 x 6, 5	223
	Z 3, 9 x 9, 5	193
	Z 3, 9 x 16	305
	Z 4, 2 x 13	103
	Z 4, 2 x 19	216
	Z 4, 8 x 9, 5	191
7982	S 2, 9 x 6, 5	234
		250
	S 2, 9 x 9, 5	270
	S 3, 5 x 9, 5	327
	chromium-plated	329
	S 3, 5 x 13	327
	chromium-plated	
	S 3, 9 x 9, 5	326
	S 3, 9 x 9, 5	217
	chromium-plated	
	S 3, 9 x 13	224
		263
		329
	S 4, 8 x 16	310
	S 5, 5 x 22	222
	Z 2, 9 x 9, 5	241
	Z 3, 5 x 9, 5	293
	Z 3, 9 x 9, 5	269
	Z 3, 9 x 13	217
	chromium-plated	
7983	S 2, 9 x 6, 5	219
	chromium-plated	
	S 2, 9 x 9, 5	217
	chromium-plated	220

Standard	Dimension	Page
DIN		
7983	S 2, 9 x 13	242
	chromium-plated	254
	S 3, 5 x 19	327
	chromium-plated	
	S 3, 5 x 22	214
	chromium-plated	217
	S 3, 5 x 25	211
	chromium-plated	
	S 3, 9 x 13	259
	chromium-plated	311
	S 3, 9 x 16	326
	chromium-plated	
	S 4, 2 x 13	219
	S 4, 2 x 16	262
	chromium-plated	
	S 4, 2 x 19	223
		224
	S 4, 2 x 32	222
		262
	S 4, 2 x 38	322
	chromium-plated	
	Z 4, 2 x 13	218
		220
7985	AM 3 x 8	264
	AM 4 x 10	189
		190
		191
		282
		284
		304
		306
		312
		313
	AM 4 x 10	285
	chromium-plated	286
	AM 4 x 12	215

Standard	Dimension	Page
DIN		
7985	AM 4 x 12	285
	chromium-plated	286
	AM 4 x 18	285
	chromium-plated	
	AM 5 x 10	189
		194
	AM 5 x 12	215
		284
		305
	AM 5 x 15	280
	AM 5 x 18	280
	AM 6 x 10	190
		238
		251
		259
	AM 6 x 12	236
		303
	AM 6 x 15	233
		247
		249
		278
		281
		312
	AM 6 x 18	239
		251
	AM 6 x 20	195
	AM 6 x 22	278
7986	AM 3 x 5	263
	AM 3 x 8	263
	AM 4 x 8	239
		252
	AM 4 x 20	263
	AM 8 x 15	297
	chromium-plated	298

Standard	Dimension	Page
DIN		
7987	AM 3 x 8	218
	AM 4 x 6	218
		236
	AM 5 x 10	236
	AM 6 x 10	327
	chromium-plated	
	AM 6 x 12	303
	AM 6 x 15	215
		231
		240
		247
		255
	AM 8 x 20	229
		230
		240
		245
		252
	AM 8 x 45	326
	chromium-plated	
7988	AM 3 x 8	273
	AM 4 x 8	266
	chromium-plated	
	AM 4 x 12	264
	chromium-plated	
	AM 5 x 8	236
	AM 5 x 15	240
		254
	AM 6 x 8	257
	AM 6 x 10	257
	AM 6 x 12	303
	AM 6 x 15	231
		247
		259
		266
	BM 4 x 30	194

Standard	Dimension	Page
DIN		
9021	A 3	241
		242
		254
	A 4	215
		219
		226
		227
	A 5	236
		280
		298
		300
	A 6	151
		167
		195
		237
		258
		275
		295
		321
		330
	A 8	178
		182
		294
9045	14	12
	80	122
40621	B 5 x 6, 2	106
		282
		283
	B 12 x 13, 6	189
	B 16 x 18	187
70616	M 10 chromium-plated	97
71401	CM 14 x 1, 5 K	5
		182
DIN		
71412	A 6	129
		136
		137
	A 8	99
		113
		117
		169
	A 10	161
	B 8	112
		115
71426	4, 1	61
	4, 2	61
71805	A 8	43
		44
	R 16	80
	S 10	96
	S 13	97
72566	C	62
72571	1 x 5	153
	1 x 6	174
	1 x 8	189
72581	12 Amp. 8	191
72601	B 12 V 35/35 W	272
	F 12 V 15 W	274
		275
	G 12 V 3 W	272
	G 12 V 5 W	272
	H 12 V 2 W	192
		267
		275
	K 12 V 10 W	269
	L 12 V 5 W	273
		274

Standard	Dimension	Page
DIN		
72601	M 12 V 3 W	168
73102	A 40 x 3 ac	137
73121	D 25 x 18 x 72	23
		24
		25
73123	A 25	23
		24
		25
N		
37 b	8 x 14	82
46	A 14 x 10	241
		253
55 a	4	166
	5	147
		304
	8	97
	10	102
		151
55 b	A 18 x 1, 2 K	94
55 e	G 12 x 1, 2	105
56 d	4 chrom. -plated	326
56 f	4	330
59 a	B 25	4
170 a	M 10 x 28	165
202 FU 3		198
202 K		330
202 MU 5		71
202 WU 8		198

Standard	Dimension	Page
N		
255 a	75 x 87 x 6 GL	18
261	4 x 0, 8	62
	5 x 0, 8	62
262	S 5	14
	S 9	127
		183
	WSN 5	171
		172
		173
		280
	WSN 9	172
		184
263	5 x 0, 35	14
		171
		172
		173
		280
	9 x 0, 4	127
		172
		183
		184
272	12 x 18 x 260	183
	32 x 40 x 70	183
	38 x 46 x 70	184
275	9, 5 x 850 long	71
288 a	S 17/9	158
331	5 x 80 x 25/25	43
	5 x 170 x 25/25	44
	8 x 128 x 32/32 left	102
397 b		197

Standard	Dimension	Page	Standard	Dimension	Page
AGGN					
14440	M 8	50			
	M 10	76			
14441	M 8	177			
	M 10	53			
	M 12	76			

2000 - 5.56. DB - Printed in Germany